SERVICE MANUAL

AC Inverter

Wall mounted Type E -Series

HSU-09HEA03/(BP)

HSU-12HEA03/(BP)

Haier
Inspired living

splitoff.ru

Большая библиотека технической документации
https://splitsystema48.ru/instrukcii-po-ekspluatacii-kondicionerov.html
каталоги, инструкции, сервисные мануалы, схемы.

Table of Contents

1. Introduction..... 1
2. List of Functions 6
3. Specifications 7
4. Printed Circuit Board Connector Wiring Diagram 9
5. Functions and Control..... 14
5.1 main functions and control specifications.....14
5.2 Function of Main Thermistor..... 20
5.3 Value of Thermistor.. 23
6. System Configuration 39
6.1 System Configuration..... 39
6.2 Instruction..... 39
7. Error Codes and Description..... 59
7.1 Problem Symptoms and Measures 59
7.2 TroubleShooting..... 59
8. Installations..... 73
9. Removal Procedure..... 81
9.1 Removal of Air Filter..... 81
9.2 Removal of Front Grille..... 82
9.3 Removal of Horizontal Blade 83

Все каталоги и инструкции здесь: https://splitsystema48.ru/instrukcii-po-ekspluatacii-kondicionerov.html

9.4 Removal of Drain pan 86

9.5 Removal of Vertical Blades and Swing Motor..... 87

9.6 Removal of Electrical Box 88

9.7 Removal of Heat Exchanger 89

9.8 Removal of Fan Rotor and Fan Motor. 91

9.9 Removal of Outdoor Panel 93

9.10 Removal of Electrical Box 97

9.11 Removal of Fan and Fan Motor 98

9.12 Removal of fan motor bractek and parttion 99

9.13 Removal of compressor and heat exchanger..... 101

10. Appendix..... 102

10.1 Piping Diagrams..... 102

10.2 Wiring Diagrams..... 103

11.Circuit Diagrams 105

Все каталоги и инструкции здесь: https://splitsystema48.ru/instrukcii-po-ekspluatacii-kondicionerov.html

Warning	
Do not repair the electrical components with wet hands. Working on the equipment with wet hands can cause an electrical shock.	
Do not clean the air conditioner by splashing water. Washing the unit with water can cause an electrical shock.	
Be sure to provide the grounding when repairing the equipment in a humid or wet place, to avoid electrical shocks.	
Be sure to turn off the power switch and unplug the power cable when cleaning the equipment. The internal fan rotates at a high speed, and cause injury.	
Do not tilt the unit when removing it. The water inside the unit can spill and wet the furniture and floor.	
Be sure to check that the refrigerating cycle section has cooled down sufficiently before conducting repair work. Working on the unit when the refrigerating cycle section is hot can cause burns.	
Use the welder in a well-ventilated place. Using the welder in an enclosed room can cause oxygen deficiency.	

1.1.2 Cautions Regarding Products after Repair

Warning	
Be sure to use parts listed in the service parts list of the applicable model and appropriate tools to conduct repair work. Never attempt to modify the equipment. The use of inappropriate parts or tools can cause an electrical shock, excessive heat generation or fire.	
When relocating the equipment, make sure that the new installation site has sufficient strength to withstand the weight of the equipment. If the installation site does not have sufficient strength and if the installation work is not conducted securely, the equipment can fall and cause injury.	
Be sure to install the product correctly by using the provided standard installation frame. Incorrect use of the installation frame and improper installation can cause the equipment to fall, resulting in injury.	For integral units only
Be sure to install the product securely in the installation frame mounted on a window frame. If the unit is not securely mounted, it can fall and cause injury.	For integral units only

Все каталоги и инструкции здесь: https://splitsystema48.ru/instrukcii-po-ekspluatacii-kondicionerov.html

Warning	
Be sure to use an exclusive power circuit for the equipment, and follow the technical standards related to the electrical equipment, the internal wiring regulations and the instruction manual for installation when conducting electrical work. Insufficient power circuit capacity and improper electrical work can cause an electrical shock or fire.	
Be sure to use the specified cable to connect between the indoor and outdoor units. Make the connections securely and route the cable properly so that there is no force pulling the cable at the connection terminals. Improper connections can cause excessive heat generation or fire.	
When connecting the cable between the indoor and outdoor units, make sure that the terminal cover does not lift off or dismount because of the cable. If the cover is not mounted properly, the terminal connection section can cause an electrical shock, excessive heat generation or fire.	
Do not damage or modify the power cable. Damaged or modified power cable can cause an electrical shock or fire. Placing heavy items on the power cable, and heating or pulling the power cable can damage the cable.	
Do not mix air or gas other than the specified refrigerant (R-410A / R22) in the refrigerant system. If air enters the refrigerating system, an excessively high pressure results, causing equipment damage and injury.	
If the refrigerant gas leaks, be sure to locate the leak and repair it before charging the refrigerant. After charging refrigerant, make sure that there is no refrigerant leak. If the leak cannot be located and the repair work must be stopped, be sure to perform pump-down and close the service valve, to prevent the refrigerant gas from leaking into the room. The refrigerant gas itself is harmless, but it can generate toxic gases when it contacts flames, such as fan and other heaters, stoves and ranges.	
When replacing the coin battery in the remote controller, be sure to disposed of the old battery to prevent children from swallowing it. If a child swallows the coin battery, see a doctor immediately.	

Caution	
Installation of a leakage breaker is necessary in some cases depending on the conditions of the installation site, to prevent electrical shocks.	
Do not install the equipment in a place where there is a possibility of combustible gas leaks. If a combustible gas leaks and remains around the unit, it can cause a fire.	
Be sure to install the packing and seal on the installation frame properly. If the packing and seal are not installed properly, water can enter the room and wet the furniture and floor.	For integral units only

Все каталоги и инструкции здесь: https://splitsystema48.ru/instrukcii-po-ekspluatacii-kondicionerov.html

1.1.3 Inspection after Repair

Warning	
Check to make sure that the power cable plug is not dirty or loose, then insert the plug into a power outlet all the way. If the plug has dust or loose connection, it can cause an electrical shock or fire.	
If the power cable and lead wires have scratches or deteriorated, be sure to replace them. Damaged cable and wires can cause an electrical shock, excessive heat generation or fire.	

Warning	
Do not use a joined power cable or extension cable, or share the same power outlet with other electrical appliances, since it can cause an electrical shock, excessive heat generation or fire.	

Caution	
Check to see if the parts and wires are mounted and connected properly, and if the connections at the soldered or crimped terminals are secure. Improper installation and connections can cause excessive heat generation, fire or an electrical shock.	
If the installation platform or frame has corroded, replace it. Corroded installation platform or frame can cause the unit to fall, resulting in injury.	
Check the grounding, and repair it if the equipment is not properly grounded. Improper grounding can cause an electrical shock.	
Be sure to measure the insulation resistance after the repair, and make sure that the resistance is 1 M ohm or higher. Faulty insulation can cause an electrical shock.	
Be sure to check the drainage of the indoor unit after the repair. Faulty drainage can cause the water to enter the room and wet the furniture and floor.	

Все каталоги и инструкции здесь: https://splitsystema48.ru/instrukcii-po-ekspluatacii-kondicionerov.html

1.1.4 Using Icons

Icons are used to attract the attention of the reader to specific information. The meaning of each icon is described in the table below:

1.1.5 Using Icons List

Icon	Type of Information	Description
Note:	Note	A “note” provides information that is not indispensable, but may nevertheless be valuable to the reader, such as tips and tricks.
Caution	Caution	A “caution” is used when there is danger that the reader, through incorrect manipulation, may damage equipment, loose data, get an unexpected result or has to restart (part of) a procedure.
Warning	Warning	A “warning” is used when there is danger of personal injury.
	Reference	A “reference” guides the reader to other places in this binder or in this manual, where he/she will find additional information on a specific topic.

Все каталоги и инструкции здесь: https://splitsystema48.ru/instrukcii-po-ekspluatacii-kondicionerov.html

2. List of Functions

Category	Functions	HSU-09/12HEA03/(BP)	HSU-09/12HEA03/(BP)
Healthy negative ion	Make your room full of an abundance natural negative ions.	N	N
Child lock	Avoid the child's wrong operation on the remote controller	Y	Y
Auto mode	Adjust the last fixed operation mode automatically.	N	N
12Hour timer	Use the timer function to set on,or off.	Y	Y
Auto restart	Automatic return to previous operation conditions after asundden power blackout	N	N
Easy clean design	The panel is easy to wash and the airflow vents can be detached easily	Y	Y
Intelligent air	With twin-blade technology ,the airflow can be adjusted not to blow directly	Y	Y
Anti-mold filter	Catches most small particles and remove unpleasant odors effectively.	Y	Y
Sleep mode	The setting temprature and the indoor noise can be adjusted to a more comfortable level when you set the "sleep mode"during night sleep	N	N
4 Fan setting	Slect the fan speed LO,MED,HI,AUTO	Y	Y
Dry Function	Make dehumidifying in the room when the unit is working in the "DRY" mode	Y	Y

Все каталоги и инструкции здесь: https://splitsystema48.ru/instrukcii-po-ekspluatacii-kondicionerov.html

3 Specifications

Model			HSU-09HEA03/(BP)		HSU-12HEA03/(BP)	
			Cooling	Heating	Cooling	Heating
Capacity Rated (Min.~Max.)		kW	2.6	3.6	3.5	4.8
		Btu/h	8840	11240	11950	16389
		kcal/h	2236	2831	3010	4128
Moisture Removal		L/h	1.2	—	1.5	—
Running Current (Rated)		A	4.5	6.2	6.9	8.4
Power Consumption Rated (Min.~Max.)		W	1450	1600	2110	2000
Power Factor		%	98	98	98	98
COP Rated (Min.~Max.)		W/W	3.6	3.08	2.80	2.81
Piping Connections	Liquid	mm	Φ6.35		Φ6.35	
	Gas	mm	Φ9.52		Φ12.7	
	drain	mm	Φ16.0		Φ16.0	
Heat Insulation			Both Liquid and Gas Pipes		Both Liquid and Gas Pipes	
Max. Interunit Piping Length		m	7		7	
Max. Interunit Height Difference		m	5		5	
Chargeless		m	5		5	
Amount of Additional Charge of Refrigerant		g/m	16		16	
Indoor Unit						
Front Panel Color			White		White	
Air Flow Rate	m³/min(cfm)	H	9.4	8.2	10.1	10.1
		M	7.7	7.7	8.2	8.2
		L	5.9	5.9	6.5	6.5
		SL	4.5	4.5	5.2	5.2
Fan	Type		Cross Flow Fan		Cross Flow Fan	
	Motor Output	W	>=15.0		>=15.0	
	Speed	Steps	4 Steps,Silent,Auto		4 Steps,Silent,Auto	
Air Direction Control			Righe,Left,Horizontal,Downward		Righe,Left,Horizontal,Downward	
Air Filter			Removable/Washable/Mildew Proof		Removable/Washable/Mildew Proof	
Running Current (Rated)		A	0.15	0.15	0.15	0.15
Power Consumption (Rated)		W	33	33	33	33
Power Factor		%	96	96	96	96
Temperature Control			Microcomputer Control		Microcomputer Control	
Dimensions (H×W×D)		mm	265x795x187		265x795x187	
Packaged Dimensions (H×W×D)		mm	315x848x260		315x848x260	
Weight		kg	8.1		8.7	
Gross Weight		kg	9.7		10.3	
OperationSound	H/M/L	dBA	38/35/30		39/36/31	
Sound Power	H	dBA	48		50.0	

Все каталоги и инструкции здесь: https://splitsystema48.ru/instrukcii-po-ekspluatacii-kondicionerov.html

Outdoor Unit						
Casing Color			White		White	
Compressor	Type		Rotary Compressor		Rotary Compressor	
	Model		KHV104FCKA		SHV130FFDC	
	Motor Output	W	550		650	
RefrigerantOil	Model		HAF68D1 or equivalent		FV50S	
	Charge	L	0.33		0.52	
Refrigerant	Model		R22		R22	
	Charge	kg	0.75		1.08	
Air Flow Rate (H/L)	m³/min		31.6	31.6	31.6	31.6
	cfm		1115	1115	1115	1115
Fan	Type		Propeller		Propeller	
	Motor Output	W	80		80	
Running Current (Rated)		A	3.5	3.5	4.9	5.0
Power Consumption (Rated)		W	780	780	1090	1100
Power Factor		%	98	98	98	98
Starting Current		A	20		26	
Dimensions (H×W×D)		mm	543x783x255		543x783x255	
Packaged Dimensions (H×W×D)		mm	594X915X325		594X915X325	
Weight		kg	31		34	
Gross Weight		kg	34		39	
OperationSound	H/L	dBA	50	54	54	50
Sound Power	H	dBA	63	64	64	64

Note: The data are based on the conditions shown in the table below.

Cooling	Heating	Piping Length
Indoor ; 27°CDB/19°CWB Outdoor ; 35°CDB/24°CWB	Indoor ; 20°CDB Outdoor ; 7°CDB/6°CWB	5m

Conversion Formulae
kcal/h=kW×860
Btu/h=kW×3414
cfm=m³/min×35.3

Все каталоги и инструкции здесь: https://splitsystema48.ru/instrukcii-po-ekspluatacii-kondicionerov.html

4.Printed Circuit Board Connector Wiring Diagram

4.1：Indoor unit Connectors

Connectors

PCB(1) (Control PCB)

1) CN2 Connector for fan motor
2) CN9 Connector for STEP motor
3) CN8 Connector for heat exchanger thermistor and Room temperature thermistor
4) CN7 Connector for fan feedback
5) CN3 Connector for communicate and power N wire
6) CN1 Connector for transformer input
7) CN4 Connector for transformer output
8) CN6 Connector for display board

Note: Other designations

PCB(1) (INdoor Control PCB)

1) SW1 Forced operation ON / OFF switch
2) SW2 Select 25 or 35
3) LED1 communicate display light
4) RV1 Varistor
5) FUSE1 Fuse 3.15A/250VAC

Все каталоги и инструкции здесь: https://splitsystema48.ru/instrukcii-po-ekspluatacii-kondicionerov.html

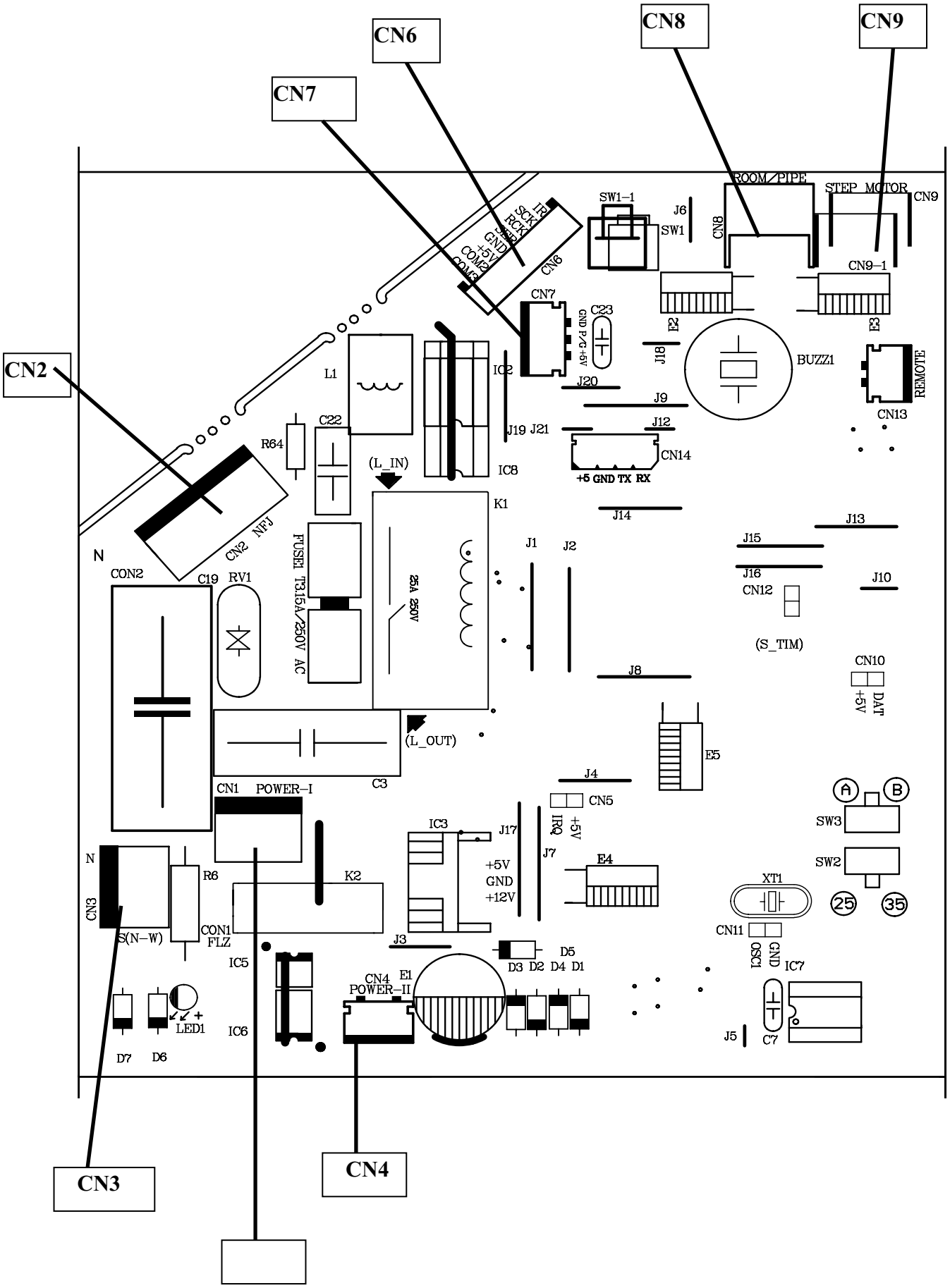

Все каталоги и инструкции здесь: https://splitsystema48.ru/instrukcii-po-ekspluatacii-kondicionerov.html

4.2 ： outdoor unit

Connectors

PCB(1) (Control PCB)

1) CN2,CN3 Connector for power N and L
2) CN4 Connector for ground
3) CN13 Connector for DC POWER 15Vand 5V to the module board
4) CN1 Connector for capacitance board
5) CN8 Connector for fan motor
6) CN7 Connector for four way valve coil
7) CN9,CN10,CN11Connector for thermistors
(CN11: outdoor air, CN9: heat exchanger, CN10 :discharge pipe)
8) CN14 Connector for communicate between the control board and the module board

PCB(2) (module PCB)

CN1/CN101 Connector for the DC power 5V and 15V form the control PCB
CN2/CN102 Connector for communicate between the control board and the module board

Note：Other Designations
PCB(1) (Control PCB)
2)LED1 LED2 LED3 keep light representative normal ,if put out representative trouble Alarm
3)ZEN 1,ZEN2,ZEN3 Varistor

Все каталоги и инструкции здесь: https://splitsystema48.ru/instrukcii-po-ekspluatacii-kondicionerov.html

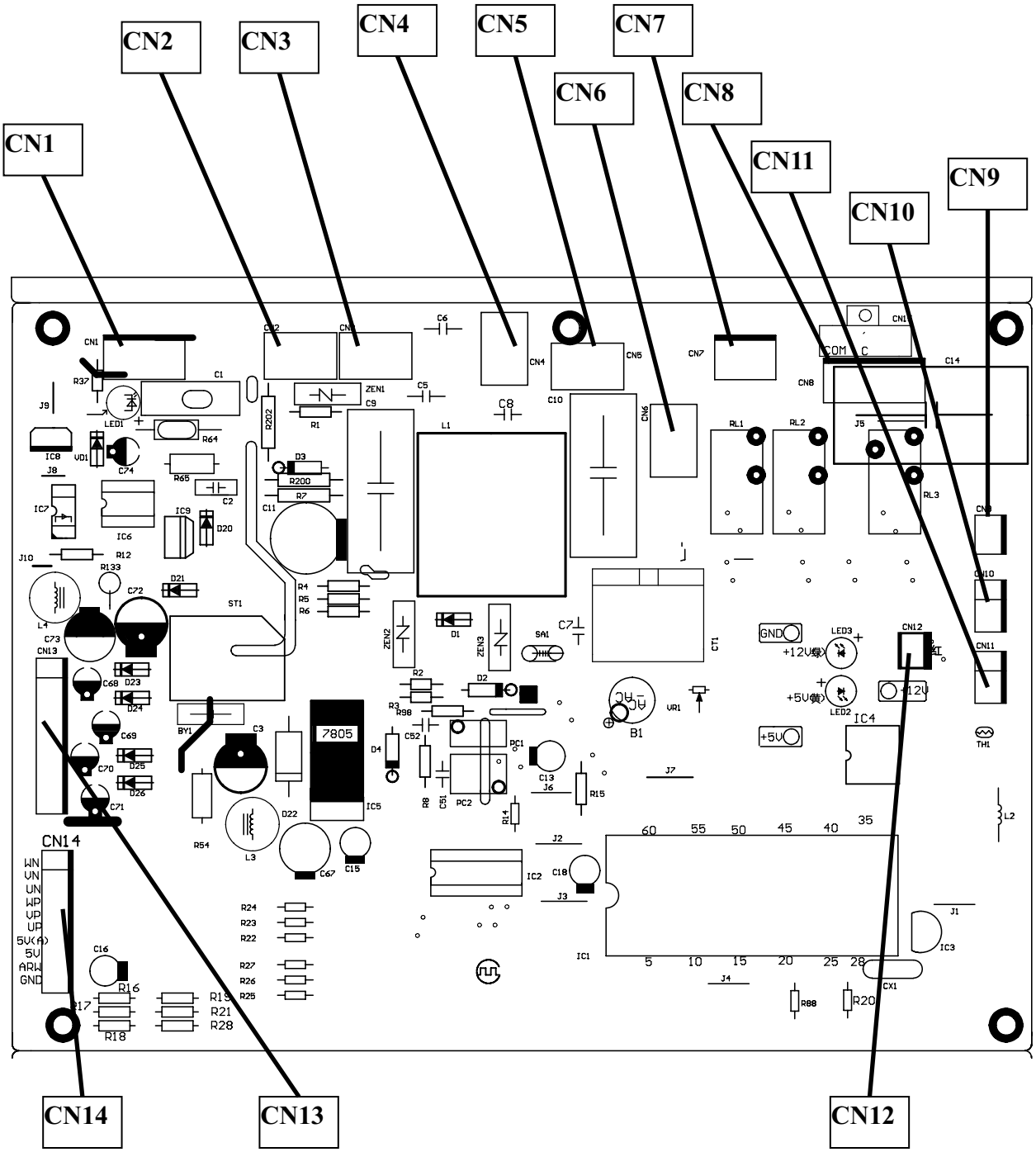

PCB(1)

Все каталоги и инструкции здесь: https://splitsystema48.ru/instrukcii-po-ekspluatacii-kondicionerov.html

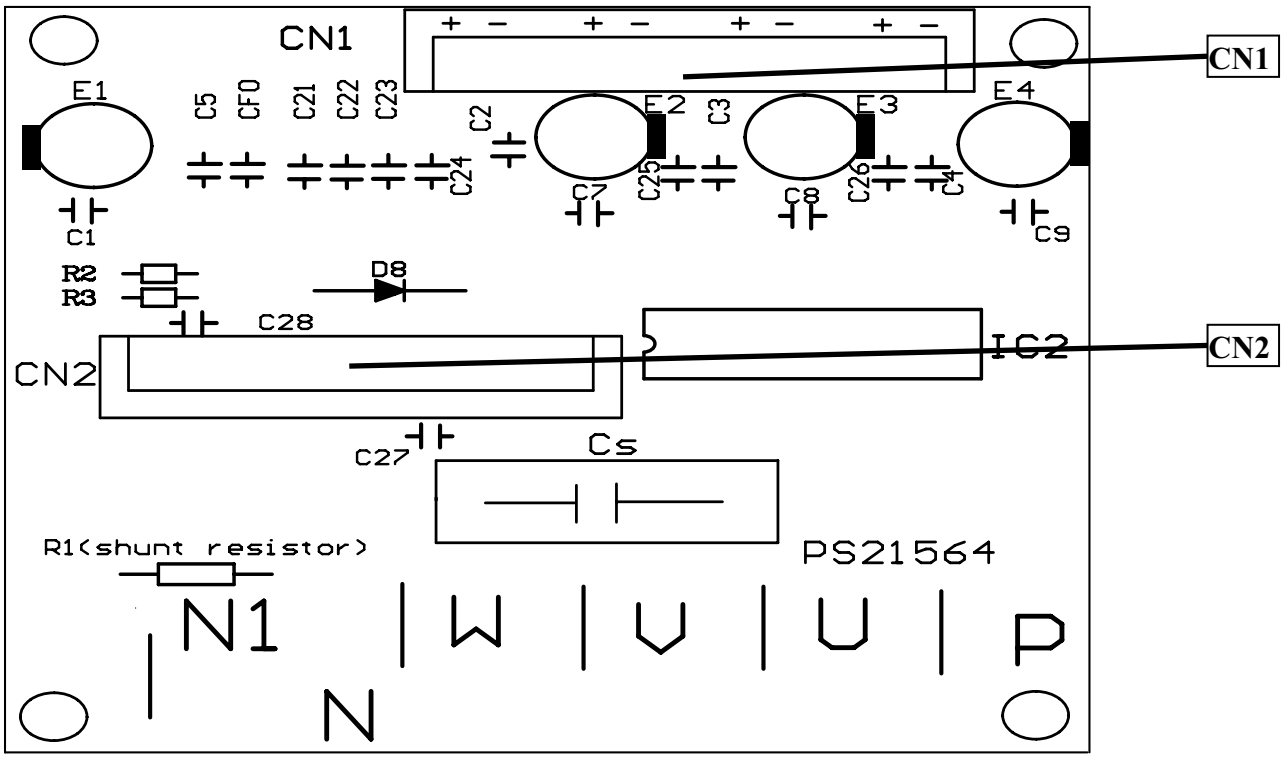

THE module PCB of the HSU-09HEA03/(BP) outdoor unit

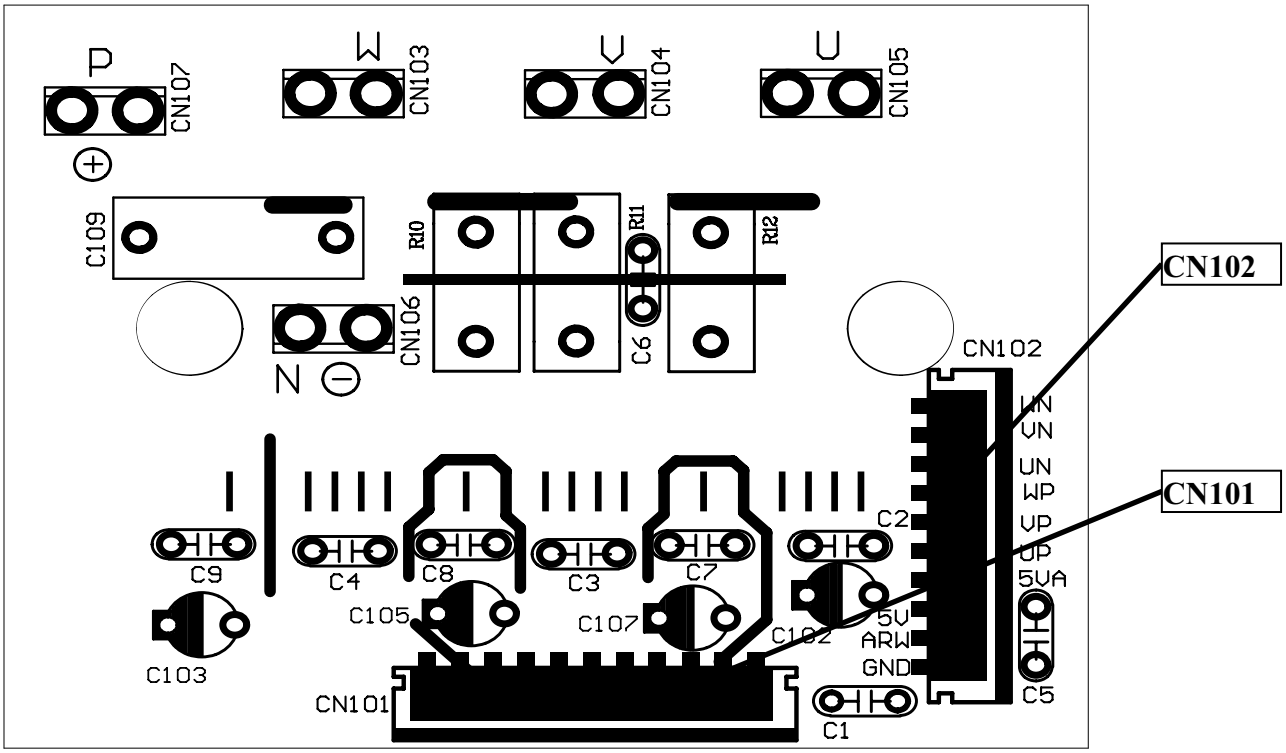

THE module PCB of the HSU-12HEA03/(BP) outdoor unit

PCB(2)

Все каталоги и инструкции здесь: https://splitsystema48.ru/instrukcii-po-ekspluatacii-kondicionerov.html

5.Funcitions and Control

5.1 Main functions and control specification of indoor unit

This specification use for **HSU-09/12HEA03/(BP)**frequency conversion air condition are manufactured by Haier air condition parent company. "Setting value" (express in parameter) in this specification means is a parameter that is stored in EEPROM. Refer to [EEPROM parameter table].

5.1.1 Temperature Adjusting function

5.1.1.1 The frequency kept when the frequency rises.

When the operation enters into the work mode, in order to insure the full oil-returning, some frequency should be kept for some time.

Indication time		Indication frequency
Cooling & moisture removing	Heating	Frequency kept
60 seconds	60 seconds	58 Hz/90Hz

5.1.1.2 Select the wind volume when it is set automatic

When the wind volume is automatic, it can be switched between strong, medium and weak according to the temperature adjusting levels.

Wind volume under the automatic wind volume mode

	Temperature adjusting levels								
	A	B	C	D	E	F	G	H	I
Heating	Strong	Strong	Strong	Strong	Strong	Medium	Weak	Weak	SLO
cooling		Strong	Strong	Strong	Medium	Medium	Weak	Weak	Weak
Moisture removing		Strong	Medium	Medium	Medium	Weak	Weak	SLO	SLO

5.1.1.3 Wind volume limit

When the compressor is working and the max setting for indoor fan motor is medium or weak, the upper limit of indicated frequency is as follows:

Frequency control form for wind volume

	Limited frequency variables	Limited frequency
Medium wind volume	FQLIMMD	90Hz
Weak wind volume	FQLIMLO	52Hz
Limited frequency for up/down health wind	FUPHEAL	30Hz

Все каталоги и инструкции здесь: https://splitsystema48.ru/instrukcii-po-ekspluatacii-kondicionerov.html

5.1.2 Main functions

5.1.2.1 Warm boot

When the heat running starts or the frost removing ends and the compressor starts again, in order to avoid cold wind, warm boot wind volume control should be done.

Heat exchange temperature

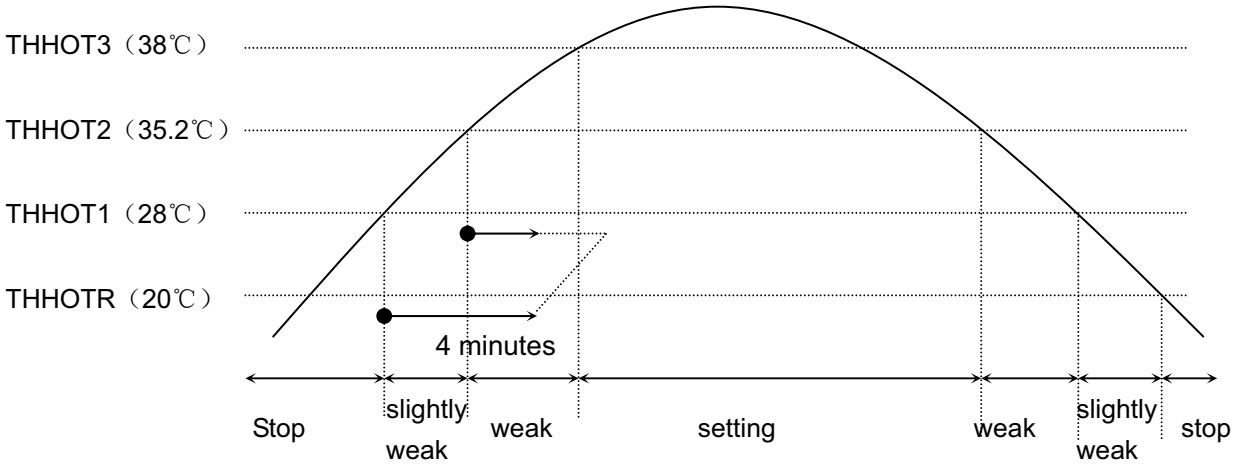

To control the indoor fan motor as shown in the table above according to the heat exchange temperature

The fan motor stops when the heat exchange temperature is below 28℃

The fan motor is working slightly weak when the heat exchange temperature is above 28 ℃ and below 35℃

The fan motor is working weak if the he heat exchange temperature remains 35℃ for less than 4 minutes.

The fan motor works as set if the he heat exchange temperature remains 35℃ for more than 4 minutes

The fan motor works as set if the he heat exchange temperature remains above 38℃

5.1.2.2 When the compressor stops and remains idle for 3 minutes

20 seconds after the compressor stops, the up wind volume is weak (switching to SSLO in silent running mode) and then slightly weak. While the down wind volume is stoped

If the compressor stops when the heat running starts, the wind volume is weak

5.1.2.3 High Work-intense protection control

Under the heating mode, the high work-intense protection will be carried out according to the heat-exchange temperatures as shown in the table below.

Все каталоги и инструкции здесь: https://splitsystema48.ru/instrukcii-po-ekspluatacii-kondicionerov.html

High Work-intense protection control:

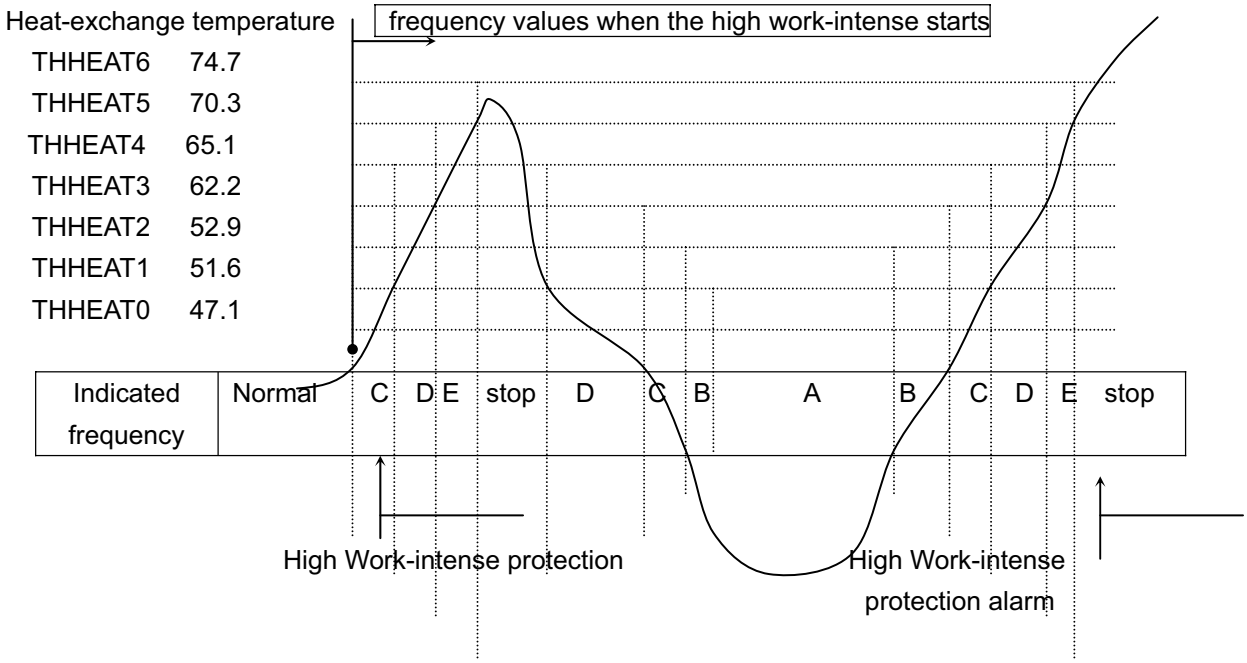

High Work-intense protection alarm will start if there are two times of high work-intense protection within 30 minutes.

If the heat-exchange temperature does not reach THHEAT 2, it will resume to the normal temperature level control

The smaller one of the high work-intense frequency and level frequency will be the operation data.

5.1.2.4 Low Work-intense protection control

Specification for heat-exchange temperature sensor

B fixed number=3700 R(25℃)= 10KΩ

Under the cooling /moisture removing modes, the low work-intense protection will be carried out according to the heat-exchange temperatures as shown in the table below.

Low Work-intense protection control:

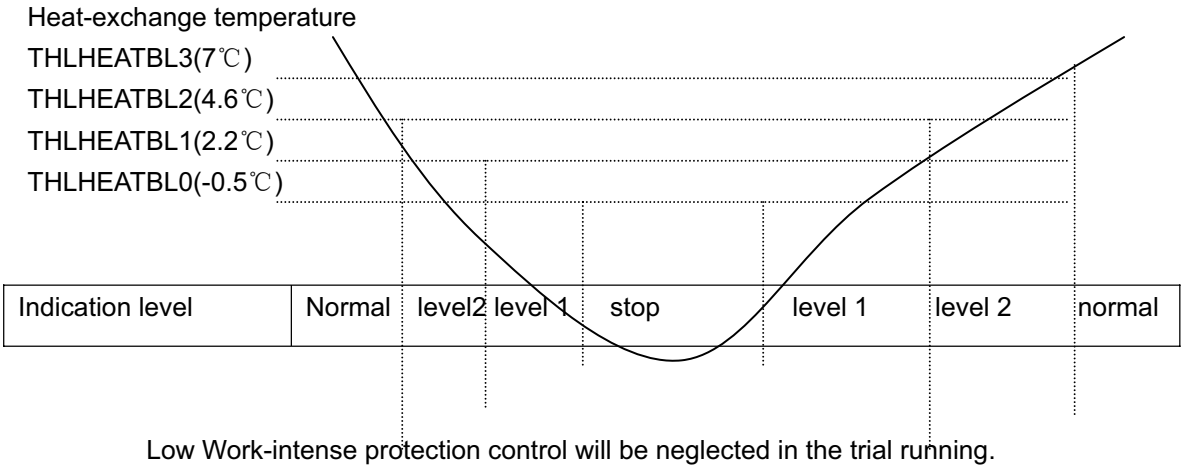

Low Work-intense protection control will be neglected in the trial running.

Low Work-intense protection control will be cancelled for 3 minutes temporarily after the powerful cooling starts for 1 minute

Все каталоги и инструкции здесь: https://splitsystema48.ru/instrukcii-po-ekspluatacii-kondicionerov.html

5.1.2.5 Dehumidification running

Under the dehumidification mode the fan motor stops as the compressor stops

The operation is weak after 3 minutes' idle mode

After stand by for 3 minutes, the compressor is on.

The compressor operates as the set wind volume when the wind volume is set to be strong, medium or weak

The wind volume is decided according to the temperature adjusting when the wind volume is set to be automatic.

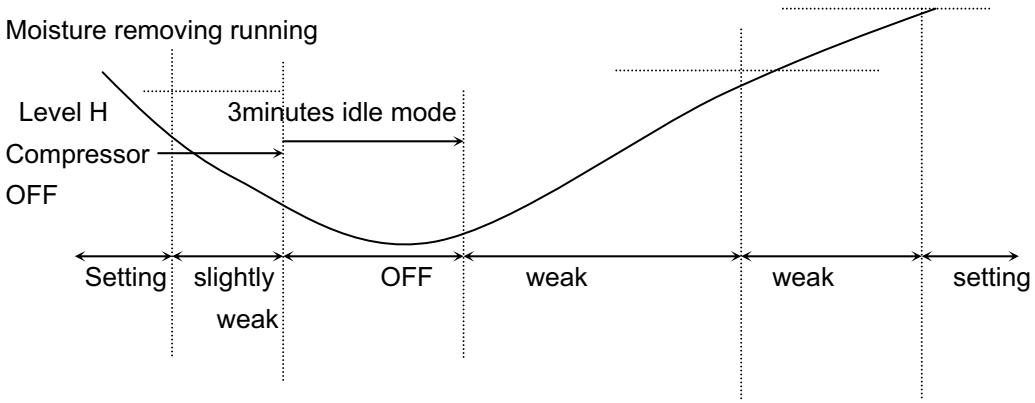

5.1.3 Special functions

5.1.3.1 Powerful running

Powerful running for 15 minutes

The running stops or ends the powerful running after 15 minutes

The mode switch ends the powerful running

Enter into the silent mode, normal running mode or timed switching on mode to end the powerful running

When the main unit is in cooling mode, it operates with powerful cooling or silent cooling. When the main unit is in heating mode, it operates with powerful heating or silent heating.

Powerful heating:

Change the set temperature. With temperature adjusting function

The wind volume is the automatic medium

When in frost removing mode, the outdoor unit does not accept the communication signal for powerful running

After 15 minutes of powerful running, the compressor can not be off within 10 minutes

Powerful cooling:

Change the set temperature. With temperature adjusting function

The wind volume is the automatic strong

After the compressor starts, there will be no low-intense running protection within 3 minutes

5.1.3.2 Silent running

Send the silent running signal to the outdoor unit

Under the Silent hearing mode,The wind volume is SSLO after the compressor is on,The wind volume will be kept SSLO within 20 seconds after the compressor stops and then changes to weak

Under the Silent cooling mode the wind volume is SSLO

Все каталоги и инструкции здесь: https://splitsystema48.ru/instrukcii-po-ekspluatacii-kondicionerov.html

There is no silent mode for moisture removing.

5.1.3.3 Air cleaning

If the fan motor starts working after receiving the remote-control order, the aion generator starts working and sends out ions.

The ion generator stops as the fan motor stops.

When the ion generator is OFF and the air cleaning function is on, the fan motor starts running and the ion generator starts working again.

5.1.3.4 Timed running

Set the time duration according to the time difference between the clock for timing and the current clock

In timing mode, the display panel will flash the light at fixed times

Timed OFF	When this function is set, operation modes on the panel display will not change. The timing icon will show and the operation stops when the set time comes.
Timed ON	When this function is on, the panel display will only display a question mark. The unit will operate as the set mode when the time comes.
Timed ON/OFF	The unit will start operating or stop according to the order of your setting.

5.1.3.5 Trial running

The indicated frequency for trial running is 58Hz, wind volume is strong.

The trial running will last for 30 minutes and then the unit will be powered off. The unit will exit the trial running if it receives any remote-control signal during the trial running period.

There is no low-intense running protection.

5.1.3.6 Power failure compensation

To enter into the function please press the health key 10 times with 4 beeps in 7 seconds

Under the power failure compensation mode, unplug and plug again ,the indoor unit will resume original operation

Under the power failure compensation mode, unplug and plug again, the unit will be on OFF state.

Mode, Fan speed, Healthy, Set temperature can be memoried. Swing, Timer, cannot be memoried

Press the health key for 10 times with 2 beeps in 7 seconds to exit.

5.1.3.7 Rated Operation

Rated Cooling:

When receiving the instruction of indoor unit rated operation, the unit will start rated cooling operation.

Rated Heating:

When receiving the instruction of indoor unit rated operation, the unit will start rated heating operation.

Все каталоги и инструкции здесь: https://splitsystema48.ru/instrukcii-po-ekspluatacii-kondicionerov.html

5.2 Main functions and control specification of outdoor unit

Sensor Code Definition: Tai= Indoor Ambient Temperature, Tao=Outdoor Ambient Temperature, Tc1=Indoor Coil, Td= Air Discharge, Te= Outdoor Coil, Ts=Air Intake

5.2.1 Outdoor Unit Operation Frequency and Control

Compressor Operation Frequency Range

Compressor Startup

Regardless of target frequency of indoor unit, each time when compressor is from off to on, it must maintain 58Hz,90Hz for one minute (Frequency will be immediately decreased under the condition that outdoor unit air discharge temperature overheating protection is activated or over current of compressor) then the compressor will operate towards target frequency. This process does not exist in normal operation of unit.

Heating

When completing compressor startup operation, it will operate as per frequency of indoor unit.

After 2 minutes, compressor operation frequency will be compensated as per relevant conditions.

Cooling & Dehumidification:

When completing compressor startup operation, it will operate as per frequency of indoor unit.

After 2 minutes, compressor operation frequency will be compensated as per relevant conditions.

Compressor Frequency Increase/Decrease Speed

Rapid Frequency Increase/Decrease Speed 1 ----------1Hz/s

Slow Frequency Increase/Decrease Speed 2 ----------1Hz/10s

5.2.2 Outdoor fan control

Compressor startup within 3min ,outdoor fan speed control as follows:

Outdoor Temperature	<10	10∽25	≥25
Cooling/ Dehumidification	Low	Low	High
Heating	High	Low	Low

fter compressor runs 3min ,outdoor fan speed control as follows:

Cooling/ Dehumidification:

Compressor Operation Frequency（Hz）		<25	25∽45	≥45
Tao（℃）	32 ∽38	Low	High	High
	23 ∽ 32	Low	Low	High
	<23	Low		
	≥38	High		

Все каталоги и инструкции здесь: https://splitsystema48.ru/instrukcii-po-ekspluatacii-kondicionerov.html

Heating:

Compressor Operation Frequency（Hz）		<25	25∽45	≥45
Tao（℃）	≤4	Low	High	High
	4∽18	Low	Low	High
	≥18	Low		

Compressor shutdown and outdoor fan residual heat blow process

When compressor shuts down in cooling mode, outdoor fan automatically jumps to low speed and blows residual heat for 30s and stop.

5.2.3 Four-way Valve Control

Defrosting Four-way Valve Control，(please see defrosting process for details)

Time sequence of the defrosting operation is as follows:

Four-way Valve Work Status in Other Modes:

In heating mode, four-way valve is on. If compressor is off or is switched to non-heating mode, four-way valve ensures that it is off at least 2 minutes after compressor shuts down.

5.2.4 Outdoor Defrosting Control

Defrosting Mode Entry Conditions

The unit will enter defrosting mode when compressor starts up and after compressor runs for an accumulated time of 48 minutes (Upon completion of defrosting or when switched to cooling mode, compressor accumulated operation time will be cleared) and when 2 minutes' continuous checking by defrosting sensor TE (check frosting condition of outdoor unit heat exchanger) as the following conditions:

Defrosting entry temperature control TE≤-1.75℃

Defrosting Time Interval

time interval between two defrosting cycles is 48 minutes.

Defrosting Operation

When defrosting begins, compressor will stop for 20S, external fan is running and 30s later, four-way valve will be off.

When compressor starts, external fan will be off, compressor will run at 58Hz for 60s then move on to target frequency of 130Hz.

During defrosting, compressor current and air discharge overheat protection features aren`t effective.

Defrosting Exit Condition

When one of the following conditions is met, defrosting operation will be switched to heating operation.

(1):Temperature of outdoor heat exchanger exceeds 5.17℃

Все каталоги и инструкции здесь: https://splitsystema48.ru/instrukcii-po-ekspluatacii-kondicionerov.html

(3):Defrosting operation continues for 12 minutes.

When defrosting exit conditions are met, the unit will operate as follows

Compressor stops, 50s later, four-way valve will be on, 10s later, external fan starts， compressor will operate as per startup process.

5.2.5 PTC Output Control

When outdoor unit is energized, PTC output value is 0, 10s later, output value is 1.

When compressor stops for 10 minutes continuously, PTC output value is 0.

On receiving compressor startup instruction, initial PTC output is 1, and compressor startup will be performed 5s later.

5.2.6 System Protection Function

5.2.6.1 3 minutes stand-by time

Time interval between compressor shutdown and restart is set at 3 minutes to ensure that compressor will only restart after 3-minute shutdown and initial energization valves are turned on to adequate opening position after being fully turned off.

5.2.6.2 TD High Temperature Protections

As long as unit is on, the TD air discharge overheat protection feature will be activated, yet air discharge sensor fault must be alarmed 4 minutes after compressor starts.

When TD>117℃ for 20s continuously，air discharge overheat protection will be activated and fault will be reported to indoor unit.

It will not continue in other conditions.

5.2.6.3 Indoor Heat Exchanger Anti-freeze Protection

Anti-freeze during cooling

When TC < 5℃，compressor frequency will drop at a speed of 1HZ/10s

When TC starts to rise，and 6 ≤ TC ≤ 7℃，compressor frequency will remain unchanged.

When 7 < TC < 11℃, frequency will rise at a speed of 1HZ/10s.

If TC ≤ 0℃，for 2 consecutive minutes, compressor will shutdown and outdoor fault lamp blinks. Fault will not be reported to indoor unit.

When compressor shuts down for more than3 minutes，and when TC>7℃，compressor will restart.

5.2.6.4 Outdoor Temperature Limit

Cooling: When outdoor temperature is lower than 23℃, cooling operation will start, compressor frequency is limited to less than 60 HZ, outdoor wind speed is forced at level 1.

Heating: When outdoor temperature is higher than 18℃, heating operation will start, compressor frequency is limited to less than 60 HZ, outdoor wind speed is forced at level 1.

Все каталоги и инструкции здесь: https://splitsystema48.ru/instrukcii-po-ekspluatacii-kondicionerov.html

5.2.6.5 Special Features

1. Forced Cooling: When receiving indoor forced cooling signal, cooling operation will start in a frequency signaled by indoor unit. Only air discharge temperature and over current protection features are effective and other protection features are invalid.

2. Rated, Middle and Minimum Capacity Operation: When receiving indoor, rated, middle and minimum capacity operation signal, outdoor unit will operate as per wind speed and frequency set by EEPROM and all the protection features are effective.

5.2.6.6 Fault Display and Treatment

In case outdoor unit faults, the alarm indicator lamp will blink and blink frequency is 1HZ，Time interval between blink cycles is 3s.

Alarm indicator lamp is off when there is no fault.

Все каталоги и инструкции здесь: https://splitsystema48.ru/instrukcii-po-ekspluatacii-kondicionerov.html

5.3 Function of Main Thermistor

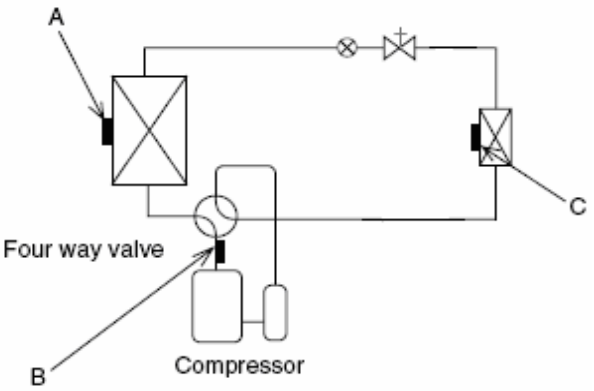

Note: A: Outdoor suction temperature sensor
B: Exhaust temperature sensor
C: Indoor heat-exchange sensor

Outdoor Suction Temperature Sensor

The outdoor heat exchanger thermistor is used for controlling target discharge temperature. The system sets a target discharge temperature according to the outdoor and indoor heat exchanger temperature, and controls the electronic expansion valve opening so that the target discharge temperature can be obtained.

Exhaust Temperature Sensor

The discharge pipe thermistor is used for controlling temperature of the discharge pipe. If the temperature of discharge pipe (used in place of the inner temperature of the compressor) rises abnormally, the operating frequency drops or the operation halts.

Indoor heat-exchange sensor

1.The indoor heat exchanger thermistor is used for controlling target discharge temperature. The system sets a target discharge temperature according to the outdoor and indoor heat exchanger temperature, and controls the electronic expansion valve opening so that the target discharge temperature can be obtained.

2.The indoor heat exchanger thermistor is used for preventing freezing.During the cooling operation, if the temperature drops abnormally, the operating frequency becomes lower, then the operation halts.

3.The indoor heat exchanger thermistor is used for anti-icing control.During the cooling operation, if the heat exchanger temperature in the room where operation is halted becomes -1°C, it is assumed as icing.

Все каталоги и инструкции здесь: https://splitsystema48.ru/instrukcii-po-ekspluatacii-kondicionerov.html

5.4 Value of Thermistor

5.4.1 intdoor Unit

Room sensor

R25℃=23KΩ±3.5%

B25℃/50℃=4200K±3%

Temp.(℃)	Max.(KΩ)	Normal(KΩ)	Min.(KΩ)	Tolerance(℃)	
-30	568.8372	501.0746	440.8435	-1.97	1.75
-29	530.9600	468.6491	413.1441	-1.95	1.74
-28	495.8488	438.5314	387.3645	-1.93	1.72
-27	463.2850	410.5433	363.3602	-1.91	1.71
-26	433.0683	384.5212	340.9980	-1.90	1.70
-25	405.0156	360.3153	320.1558	-1.88	1.69
-24	378.9588	337.7879	300.7211	-1.86	1.67
-23	354.7440	316.8126	282.5905	-1.84	1.66
-22	332.2300	297.2732	265.6686	-1.82	1.64
-21	311.2873	279.0627	249.8676	-1.80	1.63
-20	291.7969	262.0831	235.1067	-1.78	1.62
-19	273.6494	246.2437	221.3111	-1.76	1.60
-18	256.7445	231.4612	208.4122	-1.74	1.59
-17	240.9897	217.6590	196.3462	-1.72	1.57
-16	226.3000	204.7662	185.0545	-1.70	1.56
-15	212.5973	192.7176	174.4829	-1.68	1.54
-14	199.8093	181.4531	164.5813	-1.66	1.53
-13	187.8698	170.9169	155.3033	-1.64	1.51
-12	176.7176	161.0578	146.6059	-1.62	1.49
-11	166.2961	151.8284	138.4495	-1.60	1.48
-10	156.5532	143.1847	130.7973	-1.58	1.46
-9	147.4409	135.0863	123.6153	-1.56	1.44
-8	138.9148	127.4956	116.8717	-1.53	1.43
-7	130.9337	120.3778	110.5374	-1.51	1.41
-6	123.4597	113.7009	104.5852	-1.49	1.39
-5	116.4577	107.4349	98.9897	-1.47	1.38
-4	109.8953	101.5523	93.7278	-1.45	1.36
-3	103.7422	96.0274	88.7774	-1.43	1.34
-2	97.9708	90.8365	84.1185	-1.40	1.32
-1	92.5551	85.9574	79.7322	-1.38	1.30
0	87.4712	81.3697	75.6011	-1.36	1.29
1	82.6970	77.0544	71.7088	-1.34	1.27
2	78.2118	72.9937	68.0402	-1.31	1.25
3	73.9966	69.1712	64.5813	-1.29	1.23
4	70.0335	65.5716	61.3188	-1.27	1.21
5	66.3062	62.1807	58.2405	-1.24	1.19
6	62.7992	58.9853	55.3351	-1.22	1.17
7	59.4984	55.9729	52.5917	-1.20	1.15

Все каталоги и инструкции здесь: https://splitsystema48.ru/instrukcii-po-ekspluatacii-kondicionerov.html

8	56.3905	53.1320	50.0006	-1.17	1.13
9	53.4631	50.4521	47.5523	-1.15	1.11
10	50.7048	47.9230	45.2384	-1.13	1.09
11	48.1049	45.5355	43.0505	-1.10	1.07
12	45.6534	43.2808	40.9813	-1.08	1.04
13	43.3410	41.1509	39.0236	-1.05	1.02
14	43.3410	41.1509	39.0236	-1.05	1.02
15	39.0998	37.2355	35.4167	-1.00	0.98
16	37.1553	35.4363	33.7555	-0.98	0.96
17	35.3186	33.7344	32.1818	-0.95	0.94
18	33.5833	32.1240	30.6905	-0.93	0.91
19	31.9432	30.5997	29.2769	-0.90	0.89
20	30.3925	29.1565	27.9365	-0.88	0.87
21	28.9259	27.7895	26.6651	-0.85	0.84
22	27.5383	26.4944	25.4589	-0.83	0.82
23	26.2252	25.2670	24.3140	-0.80	0.80
24	24.9822	24.1034	23.2271	-0.78	0.77
25	23.8050	23.0000	22.1950	-0.78	0.77
26	22.7500	21.9499	21.1520	-0.78	0.78
27	21.7477	20.9536	20.1638	-0.82	0.81
28	20.7951	20.0081	19.2272	-0.86	0.85
29	19.8895	19.1104	18.3394	-0.89	0.88
30	19.0285	18.2581	17.4974	-0.93	0.92
31	18.2094	17.4484	16.6988	-0.97	0.95
32	17.4302	16.6792	15.9410	-1.00	0.99
33	16.6885	15.9480	15.2217	-1.04	1.02
34	15.9825	15.2530	14.5389	-1.08	1.06
35	15.3103	14.5920	13.8903	-1.12	1.09
36	14.6700	13.9632	13.2743	-1.16	1.13
37	14.0599	13.3650	12.6889	-1.20	1.16
38	13.4786	12.7957	12.1325	-1.23	1.20
39	12.9244	12.2537	11.6035	-1.27	1.24
40	12.3960	11.7375	11.1004	-1.31	1.27
41	11.8921	11.2459	10.6218	-1.35	1.31
42	11.4113	10.7775	10.1665	-1.39	1.34
43	10.9526	10.3311	9.7330	-1.43	1.38
44	10.5147	9.9056	9.3204	-1.48	1.42
45	10.0967	9.4999	8.9275	-1.52	1.45
46	9.6976	9.1130	8.5532	-1.56	1.49
47	9.3163	8.7439	8.1965	-1.60	1.53
48	8.9521	8.3916	7.8566	-1.64	1.57
49	8.6040	8.0554	7.5327	-1.68	1.60
50	8.2713	7.7345	7.2237	-1.73	1.64
51	7.9531	7.4280	6.9291	-1.77	1.68
52	7.6489	7.1353	6.6480	-1.81	1.72

Все каталоги и инструкции здесь: https://splitsystema48.ru/instrukcii-po-ekspluatacii-kondicionerov.html

53	7.3580	6.8556	6.3797	-1.85	1.76
54	7.0796	6.5884	6.1237	-1.90	1.79
55	6.8131	6.3329	5.8793	-1.94	1.83
56	6.5581	6.0887	5.6459	-1.99	1.87
57	6.3140	5.8552	5.4230	-2.03	1.91
58	6.0802	5.6318	5.2100	-2.07	1.95
59	5.8563	5.4181	5.0065	-2.12	1.99
60	5.6417	5.2136	4.8120	-2.16	2.03
61	5.4361	5.0178	4.6260	-2.21	2.07
62	5.2391	4.8304	4.4481	-2.25	2.11
63	5.0502	4.6510	4.2780	-2.30	2.15
64	4.8691	4.4791	4.1153	-2.35	2.19
65	4.6954	4.3145	3.9596	-2.39	2.23
66	4.5287	4.1567	3.8105	-2.44	2.27
67	4.3689	4.0055	3.6678	-2.49	2.31
68	4.2154	3.8605	3.5312	-2.53	2.35
69	4.0682	3.7216	3.4004	-2.58	2.39
70	3.9268	3.5883	3.2750	-2.63	2.43
71	3.7910	3.4605	3.1549	-2.68	2.48
72	3.6606	3.3378	3.0398	-2.73	2.52
73	3.5353	3.2201	2.9294	-2.77	2.56
74	3.4150	3.1072	2.8237	-2.82	2.60
75	3.2993	2.9987	2.7222	-2.87	2.64
76	3.1881	2.8946	2.6249	-2.92	2.68
77	3.0812	2.7946	2.5316	-2.97	2.73
78	2.9785	2.6986	2.4420	-3.02	2.77
79	2.8796	2.6063	2.3560	-3.07	2.81
80	2.7845	2.5176	2.2735	-3.12	2.86
81	2.6931	2.4324	2.1943	-3.17	2.90
82	2.6050	2.3505	2.1182	-3.22	2.94
83	2.5203	2.2717	2.0451	-3.28	2.99
84	2.4388	2.1960	1.9749	-3.33	3.03
85	2.3602	2.1231	1.9075	-3.38	3.07
86	2.2846	2.0530	1.8426	-3.43	3.12
87	2.2118	1.9856	1.7803	-3.48	3.16
88	2.1416	1.9207	1.7204	-3.54	3.20
89	2.0740	1.8582	1.6628	-3.59	3.25
90	2.0089	1.7981	1.6074	-3.64	3.29
91	1.9461	1.7402	1.5541	-3.70	3.34
92	1.8856	1.6844	1.5028	-3.75	3.38
93	1.8272	1.6307	1.4535	-3.80	3.43
94	1.7709	1.5789	1.4060	-3.86	3.47
95	1.7166	1.5291	1.3603	-3.91	3.52
96	1.6643	1.4810	1.3163	-3.97	3.56

Все каталоги и инструкции здесь: https://splitsystema48.ru/instrukcii-po-ekspluatacii-kondicionerov.html

97	1.6138	1.4347	1.2739	-4.02	3.61
98	1.5650	1.3900	1.2331	-4.08	3.66
99	1.5180	1.3470	1.1937	-4.13	3.70
100	1.4726	1.3054	1.1559	-4.19	3.75
101	1.4287	1.2654	1.1194	-4.24	3.80
102	1.3864	1.2268	1.0842	-4.30	3.84
103	1.3455	1.1895	1.0503	-4.36	3.89
104	1.3060	1.1535	1.0176	-4.42	3.94
105	1.2679	1.1188	0.9860	-4.47	3.98
106	1.2310	1.0853	0.9556	-4.53	4.03
107	1.1954	1.0529	0.9263	-4.59	4.08
108	1.1610	1.0217	0.8980	-4.65	4.13
109	1.1277	0.9915	0.8707	-4.70	4.17
110	1.0955	0.9624	0.8443	-4.76	4.22
111	1.0644	0.9342	0.8189	-4.82	4.27
112	1.0344	0.9070	0.7943	-4.88	4.32
113	1.0053	0.8807	0.7706	-4.94	4.37
114	0.9771	0.8553	0.7478	-5.00	4.41
115	0.9499	0.8307	0.7256	-5.06	4.46
116	0.9235	0.8070	0.7043	-5.12	4.51
117	0.8980	0.7840	0.6837	-5.18	4.56
118	0.8734	0.7618	0.6637	-5.24	4.61
119	0.8495	0.7404	0.6445	-5.30	4.66
120	0.8263	0.7196	0.6258	-5.36	4.71

Pipe Sensor

R25℃=10KΩ±3%

B25℃/50℃=3700K±3%

Temp.((℃))	Max.(KΩ)	Normal(KΩ)	Min.(KΩ)	Tolerance(℃)	
-30	165.2170	147.9497	132.3678	-1.94	1.75
-29	155.5754	139.5600	125.0806	-1.93	1.74
-28	146.5609	131.7022	118.2434	-1.91	1.73
-27	138.1285	124.3392	111.8256	-1.89	1.71
-26	130.2371	117.4366	105.7989	-1.87	1.70
-25	122.8484	110.9627	100.1367	-1.85	1.69
-24	115.9272	104.8882	94.8149	-1.83	1.67
-23	109.4410	99.1858	89.8106	-1.81	1.66
-22	103.3598	93.8305	85.1031	-1.80	1.64
-21	97.6556	88.7989	80.6728	-1.78	1.63
-20	92.3028	84.0695	76.5017	-1.76	1.62
-19	87.2775	79.6222	72.5729	-1.74	1.60
-18	82.5577	75.4384	68.8710	-1.72	1.59
-17	78.1230	71.5010	65.3815	-1.70	1.57
-16	73.9543	67.7939	62.0907	-1.68	1.55
-15	70.0342	64.3023	58.9863	-1.66	1.54

Все каталоги и инструкции здесь: https://splitsystema48.ru/instrukcii-po-ekspluatacii-kondicionerov.html

-14	66.3463	61.0123	56.0565	-1.64	1.52
-13	62.8755	57.9110	53.2905	-1.62	1.51
-12	59.6076	54.9866	50.6781	-1.60	1.49
-11	56.5296	52.2278	48.2099	-1.58	1.47
-10	53.6294	49.6244	45.8771	-1.56	1.46
-9	50.8956	47.1666	43.6714	-1.54	1.44
-8	48.3178	44.8454	41.5851	-1.51	1.42
-7	45.8860	42.6525	39.6112	-1.49	1.40
-6	43.5912	40.5800	37.7429	-1.47	1.39
-5	41.4249	38.6207	35.9739	-1.45	1.37
-4	39.3792	36.7676	34.2983	-1.43	1.35
-3	37.4465	35.0144	32.7108	-1.41	1.33
-2	35.6202	33.3552	31.2062	-1.38	1.31
-1	33.8936	31.7844	29.7796	-1.36	1.29
0	32.2608	30.2968	28.4267	-1.34	1.28
1	30.7162	28.8875	27.1431	-1.32	1.26
2	29.2545	27.5519	25.9250	-1.29	1.24
3	27.8708	26.2858	24.7686	-1.27	1.22
4	26.5605	25.0851	23.6704	-1.25	1.20
5	25.3193	23.9462	22.6273	-1.23	1.18
6	24.1432	22.8656	21.6361	-1.20	1.16
7	23.0284	21.8398	20.6939	-1.18	1.14
8	21.9714	20.8659	19.7982	-1.15	1.12
9	20.9688	19.9409	18.9463	-1.13	1.09
10	20.0176	19.0621	18.1358	-1.11	1.07
11	19.1149	18.2270	17.3646	-1.08	1.05
12	18.2580	17.4331	16.6305	-1.06	1.03
13	17.4442	16.6782	15.9315	-1.03	1.01
14	16.6711	15.9601	15.2657	-1.01	0.99
15	15.9366	15.2770	14.6315	-0.98	0.96
16	15.2385	14.6268	14.0271	-0.96	0.94
17	14.5748	14.0079	13.4510	-0.93	0.92
18	13.9436	13.4185	12.9017	-0.91	0.90
19	13.3431	12.8572	12.3778	-0.88	0.87
20	12.7718	12.3223	11.8780	-0.86	0.85
21	12.2280	11.8126	11.4011	-0.83	0.83
22	11.7102	11.3267	10.9459	-0.81	0.80
23	11.2172	10.8634	10.5114	-0.78	0.78
24	10.7475	10.4216	10.0964	-0.75	0.75
25	10.3000	10.0000	9.7000	-0.75	0.75
26	9.8975	9.5974	9.2980	-0.76	0.76
27	9.5129	9.2132	8.9148	-0.80	0.80
28	9.1454	8.8465	8.5496	-0.84	0.83
29	8.7942	8.4964	8.2013	-0.87	0.86
30	8.4583	8.1621	7.8691	-0.91	0.90

Все каталоги и инструкции здесь: https://splitsystema48.ru/instrukcii-po-ekspluatacii-kondicionerov.html

31	8.1371	7.8428	7.5522	-0.95	0.93
32	7.8299	7.5377	7.2498	-0.98	0.97
33	7.5359	7.2461	6.9611	-1.02	1.00
35	6.9852	6.7008	6.4222	-1.10	1.07
36	6.7273	6.4459	6.1707	-1.13	1.11
37	6.4803	6.2021	5.9304	-1.17	1.14
38	6.2437	5.9687	5.7007	-1.21	1.18
39	6.0170	5.7454	5.4812	-1.25	1.22
40	5.7997	5.5316	5.2712	-1.29	1.25
41	5.5914	5.3269	5.0704	-1.33	1.29
42	5.3916	5.1308	4.8783	-1.37	1.33
43	5.2001	4.9430	4.6944	-1.41	1.36
44	5.0163	4.7630	4.5185	-1.45	1.40
45	4.8400	4.5905	4.3500	-1.49	1.44
46	4.6708	4.4252	4.1887	-1.53	1.47
47	4.5083	4.2666	4.0342	-1.57	1.51
48	4.3524	4.1145	3.8862	-1.61	1.55
49	4.2026	3.9686	3.7443	-1.65	1.59
50	4.0588	3.8287	3.6084	-1.70	1.62
51	3.9206	3.6943	3.4780	-1.74	1.66
52	3.7878	3.5654	3.3531	-1.78	1.70
53	3.6601	3.4416	3.2332	-1.82	1.74
54	3.5374	3.3227	3.1183	-1.87	1.78
55	3.4195	3.2085	3.0079	-1.91	1.82
56	3.3060	3.0989	2.9021	-1.95	1.85
57	3.1969	2.9935	2.8005	-2.00	1.89
58	3.0919	2.8922	2.7029	-2.04	1.93
59	2.9909	2.7948	2.6092	-2.08	1.97
60	2.8936	2.7012	2.5193	-2.13	2.01
61	2.8000	2.6112	2.4328	-2.17	2.05
62	2.7099	2.5246	2.3498	-2.22	2.09
63	2.6232	2.4413	2.2700	-2.26	2.13
64	2.5396	2.3611	2.1932	-2.31	2.17
65	2.4591	2.2840	2.1195	-2.36	2.21
66	2.3815	2.2098	2.0486	-2.40	2.25
67	2.3068	2.1383	1.9803	-2.45	2.29
68	2.2347	2.0695	1.9147	-2.49	2.34
69	2.1652	2.0032	1.8516	-2.54	2.38
70	2.0983	1.9393	1.7908	-2.59	2.42
71	2.0337	1.8778	1.7324	-2.63	2.46
72	1.9714	1.8186	1.6761	-2.68	2.50
73	1.9113	1.7614	1.6219	-2.73	2.54
74	1.8533	1.7064	1.5697	-2.78	2.58
75	1.7974	1.6533	1.5194	-2.83	2.63

Все каталоги и инструкции здесь: https://splitsystema48.ru/instrukcii-po-ekspluatacii-kondicionerov.html

76	1.7434	1.6021	1.4710	-2.88	2.67
78	1.6409	1.5051	1.3794	-2.97	2.75
79	1.5923	1.4592	1.3360	-3.02	2.80
80	1.5454	1.4149	1.2942	-3.07	2.84
81	1.5000	1.3721	1.2540	-3.12	2.88
82	1.4562	1.3308	1.2151	-3.17	2.93
83	1.4139	1.2910	1.1776	-3.22	2.97
84	1.3730	1.2525	1.1415	-3.27	3.01
85	1.3335	1.2153	1.1066	-3.32	3.06
86	1.2953	1.1794	1.0730	-3.38	3.10
87	1.2583	1.1448	1.0405	-3.43	3.15
88	1.2226	1.1113	1.0092	-3.48	3.19
89	1.1880	1.0789	0.9789	-3.53	3.24
90	1.1546	1.0476	0.9497	-3.58	3.28
91	1.1223	1.0174	0.9215	-3.64	3.33
92	1.0910	0.9882	0.8942	-3.69	3.37
93	1.0607	0.9599	0.8679	-3.74	3.42
94	1.0314	0.9326	0.8424	-3.80	3.46
95	1.0030	0.9061	0.8179	-3.85	3.51
96	0.9756	0.8806	0.7941	-3.90	3.55
97	0.9490	0.8558	0.7711	-3.96	3.60
98	0.9232	0.8319	0.7489	-4.01	3.64
99	0.8983	0.8088	0.7275	-4.07	3.69
100	0.8741	0.7863	0.7067	-4.12	3.74
101	0.8507	0.7646	0.6867	-4.18	3.78
102	0.8281	0.7436	0.6672	-4.23	3.83
103	0.8061	0.7233	0.6484	-4.29	3.88
104	0.7848	0.7036	0.6303	-4.34	3.92
105	0.7641	0.6845	0.6127	-4.40	3.97
106	0.7441	0.6661	0.5957	-4.46	4.02
107	0.7247	0.6482	0.5792	-4.51	4.07
108	0.7059	0.6308	0.5632	-4.57	4.12
109	0.6877	0.6140	0.5478	-4.63	4.16
110	0.6700	0.5977	0.5328	-4.69	4.21
111	0.6528	0.5820	0.5183	-4.74	4.26
112	0.6361	0.5667	0.5043	-4.80	4.31
113	0.6200	0.5518	0.4907	-4.86	4.36
114	0.6043	0.5374	0.4775	-4.92	4.41
115	0.5891	0.5235	0.4648	-4.98	4.45
116	0.5743	0.5100	0.4524	-5.04	4.50
117	0.5600	0.4968	0.4404	-5.10	4.55
118	0.5460	0.4841	0.4288	-5.16	4.60
119	0.5325	0.4717	0.4175	-5.22	4.65
120	0.5194	0.4597	0.4066	-5.28	4.70

Все каталоги и инструкции здесь: https://splitsystema48.ru/instrukcii-po-ekspluatacii-kondicionerov.html

5.4.2 Outdoor Unit

Ambient Sensor, Exhaust Sensor, Defrosting Sensor

R25℃=10KΩ±3%

B25℃/50℃=3700K±3%

Temp.(℃)	Max.(KΩ)	Normal(KΩ)	Min.(KΩ)	Tolerance(℃)	
-30	165.2170	147.9497	132.3678	-1.94	1.75
-29	155.5754	139.5600	125.0806	-1.93	1.74
-28	146.5609	131.7022	118.2434	-1.91	1.73
-27	138.1285	124.3392	111.8256	-1.89	1.71
-26	130.2371	117.4366	105.7989	-1.87	1.70
-25	122.8484	110.9627	100.1367	-1.85	1.69
-24	115.9272	104.8882	94.8149	-1.83	1.67
-23	109.4410	99.1858	89.8106	-1.81	1.66
-22	103.3598	93.8305	85.1031	-1.80	1.64
-21	97.6556	88.7989	80.6728	-1.78	1.63
-20	92.3028	84.0695	76.5017	-1.76	1.62
-19	87.2775	79.6222	72.5729	-1.74	1.60
-18	82.5577	75.4384	68.8710	-1.72	1.59
-17	78.1230	71.5010	65.3815	-1.70	1.57
-16	73.9543	67.7939	62.0907	-1.68	1.55
-15	70.0342	64.3023	58.9863	-1.66	1.54
-14	66.3463	61.0123	56.0565	-1.64	1.52
-13	62.8755	57.9110	53.2905	-1.62	1.51
-12	59.6076	54.9866	50.6781	-1.60	1.49
-11	56.5296	52.2278	48.2099	-1.58	1.47
-10	53.6294	49.6244	45.8771	-1.56	1.46
-9	50.8956	47.1666	43.6714	-1.54	1.44
-8	48.3178	44.8454	41.5851	-1.51	1.42
-7	45.8860	42.6525	39.6112	-1.49	1.40
-6	43.5912	40.5800	37.7429	-1.47	1.39
-5	41.4249	38.6207	35.9739	-1.45	1.37
-4	39.3792	36.7676	34.2983	-1.43	1.35
-3	37.4465	35.0144	32.7108	-1.41	1.33
-2	35.6202	33.3552	31.2062	-1.38	1.31
-1	33.8936	31.7844	29.7796	-1.36	1.29
0	32.2608	30.2968	28.4267	-1.34	1.28
1	30.7162	28.8875	27.1431	-1.32	1.26
2	29.2545	27.5519	25.9250	-1.29	1.24
3	27.8708	26.2858	24.7686	-1.27	1.22
4	26.5605	25.0851	23.6704	-1.25	1.20
5	25.3193	23.9462	22.6273	-1.23	1.18
6	24.1432	22.8656	21.6361	-1.20	1.16
7	23.0284	21.8398	20.6939	-1.18	1.14

Все каталоги и инструкции здесь: https://splitsystema48.ru/instrukcii-po-ekspluatacii-kondicionerov.html

8	21.9714	20.8659	19.7982	-1.15	1.12
9	20.9688	19.9409	18.9463	-1.13	1.09
10	20.0176	19.0621	18.1358	-1.11	1.07
11	19.1149	18.2270	17.3646	-1.08	1.05
12	18.2580	17.4331	16.6305	-1.06	1.03
13	17.4442	16.6782	15.9315	-1.03	1.01
14	16.6711	15.9601	15.2657	-1.01	0.99
15	15.9366	15.2770	14.6315	-0.98	0.96
16	15.2385	14.6268	14.0271	-0.96	0.94
17	14.5748	14.0079	13.4510	-0.93	0.92
18	13.9436	13.4185	12.9017	-0.91	0.90
19	13.3431	12.8572	12.3778	-0.88	0.87
20	12.7718	12.3223	11.8780	-0.86	0.85
21	12.2280	11.8126	11.4011	-0.83	0.83
22	11.7102	11.3267	10.9459	-0.81	0.80
23	11.2172	10.8634	10.5114	-0.78	0.78
24	10.7475	10.4216	10.0964	-0.75	0.75
25	10.3000	10.0000	9.7000	-0.75	0.75
26	9.8975	9.5974	9.2980	-0.76	0.76
27	9.5129	9.2132	8.9148	-0.80	0.80
28	9.1454	8.8465	8.5496	-0.84	0.83
29	8.7942	8.4964	8.2013	-0.87	0.86
30	8.4583	8.1621	7.8691	-0.91	0.90
31	8.1371	7.8428	7.5522	-0.95	0.93
32	7.8299	7.5377	7.2498	-0.98	0.97
33	7.5359	7.2461	6.9611	-1.02	1.00
34	7.2546	6.9673	6.6854	-1.06	1.04
35	6.9852	6.7008	6.4222	-1.10	1.07
36	6.7273	6.4459	6.1707	-1.13	1.11
37	6.4803	6.2021	5.9304	-1.17	1.14
38	6.2437	5.9687	5.7007	-1.21	1.18
39	6.0170	5.7454	5.4812	-1.25	1.22
40	5.7997	5.5316	5.2712	-1.29	1.25
41	5.5914	5.3269	5.0704	-1.33	1.29
42	5.3916	5.1308	4.8783	-1.37	1.33
43	5.2001	4.9430	4.6944	-1.41	1.36
44	5.0163	4.7630	4.5185	-1.45	1.40
45	4.8400	4.5905	4.3500	-1.49	1.44
46	4.6708	4.4252	4.1887	-1.53	1.47
47	4.5083	4.2666	4.0342	-1.57	1.51
48	4.3524	4.1145	3.8862	-1.61	1.55
49	4.2026	3.9686	3.7443	-1.65	1.59
50	4.0588	3.8287	3.6084	-1.70	1.62
51	3.9206	3.6943	3.4780	-1.74	1.66
52	3.7878	3.5654	3.3531	-1.78	1.70

Все каталоги и инструкции здесь: https://splitsystema48.ru/instrukcii-po-ekspluatacii-kondicionerov.html

53	3.6601	3.4416	3.2332	-1.82	1.74
54	3.5374	3.3227	3.1183	-1.87	1.78
55	3.4195	3.2085	3.0079	-1.91	1.82
56	3.3060	3.0989	2.9021	-1.95	1.85
57	3.1969	2.9935	2.8005	-2.00	1.89
58	3.0919	2.8922	2.7029	-2.04	1.93
59	2.9909	2.7948	2.6092	-2.08	1.97
60	2.8936	2.7012	2.5193	-2.13	2.01
61	2.8000	2.6112	2.4328	-2.17	2.05
62	2.7099	2.5246	2.3498	-2.22	2.09
63	2.6232	2.4413	2.2700	-2.26	2.13
64	2.5396	2.3611	2.1932	-2.31	2.17
65	2.4591	2.2840	2.1195	-2.36	2.21
66	2.3815	2.2098	2.0486	-2.40	2.25
67	2.3068	2.1383	1.9803	-2.45	2.29
68	2.2347	2.0695	1.9147	-2.49	2.34
69	2.1652	2.0032	1.8516	-2.54	2.38
70	2.0983	1.9393	1.7908	-2.59	2.42
71	2.0337	1.8778	1.7324	-2.63	2.46
72	1.9714	1.8186	1.6761	-2.68	2.50
73	1.9113	1.7614	1.6219	-2.73	2.54
74	1.8533	1.7064	1.5697	-2.78	2.58
75	1.7974	1.6533	1.5194	-2.83	2.63
76	1.7434	1.6021	1.4710	-2.88	2.67
77	1.6913	1.5528	1.4243	-2.92	2.71
78	1.6409	1.5051	1.3794	-2.97	2.75
79	1.5923	1.4592	1.3360	-3.02	2.80
80	1.5454	1.4149	1.2942	-3.07	2.84
81	1.5000	1.3721	1.2540	-3.12	2.88
82	1.4562	1.3308	1.2151	-3.17	2.93
83	1.4139	1.2910	1.1776	-3.22	2.97
84	1.3730	1.2525	1.1415	-3.27	3.01
85	1.3335	1.2153	1.1066	-3.32	3.06
86	1.2953	1.1794	1.0730	-3.38	3.10
87	1.2583	1.1448	1.0405	-3.43	3.15
88	1.2226	1.1113	1.0092	-3.48	3.19
89	1.1880	1.0789	0.9789	-3.53	3.24
90	1.1546	1.0476	0.9497	-3.58	3.28
91	1.1223	1.0174	0.9215	-3.64	3.33
92	1.0910	0.9882	0.8942	-3.69	3.37
93	1.0607	0.9599	0.8679	-3.74	3.42
94	1.0314	0.9326	0.8424	-3.80	3.46
95	1.0030	0.9061	0.8179	-3.85	3.51
96	0.9756	0.8806	0.7941	-3.90	3.55
97	0.9490	0.8558	0.7711	-3.96	3.60

Все каталоги и инструкции здесь: https://splitsystema48.ru/instrukcii-po-ekspluatacii-kondicionerov.html

98	0.9232	0.8319	0.7489	-4.01	3.64
99	0.8983	0.8088	0.7275	-4.07	3.69
100	0.8741	0.7863	0.7067	-4.12	3.74
101	0.8507	0.7646	0.6867	-4.18	3.78
102	0.8281	0.7436	0.6672	-4.23	3.83
103	0.8061	0.7233	0.6484	-4.29	3.88
104	0.7848	0.7036	0.6303	-4.34	3.92
105	0.7641	0.6845	0.6127	-4.40	3.97
106	0.7441	0.6661	0.5957	-4.46	4.02
107	0.7247	0.6482	0.5792	-4.51	4.07
108	0.7059	0.6308	0.5632	-4.57	4.12
109	0.6877	0.6140	0.5478	-4.63	4.16
110	0.6700	0.5977	0.5328	-4.69	4.21
111	0.6528	0.5820	0.5183	-4.74	4.26
112	0.6361	0.5667	0.5043	-4.80	4.31
113	0.6200	0.5518	0.4907	-4.86	4.36
114	0.6043	0.5374	0.4775	-4.92	4.41
115	0.5891	0.5235	0.4648	-4.98	4.45
116	0.5743	0.5100	0.4524	-5.04	4.50
117	0.5600	0.4968	0.4404	-5.10	4.55
118	0.5460	0.4841	0.4288	-5.16	4.60
119	0.5325	0.4717	0.4175	-5.22	4.65
120	0.5194	0.4597	0.4066	-5.28	4.70

Все каталоги и инструкции здесь: https://splitsystema48.ru/instrukcii-po-ekspluatacii-kondicionerov.html

Discharging Sensor

R80℃=50KΩ±3%

B25/80℃=4450K±3%

Temp.((℃))	Max.(KΩ)	Normal(KΩ)	Min.(KΩ)	Tolerance(℃)	
-30	14646.0505	12061.7438	9924.4999	-2.96	2.45
-29	13654.1707	11267.8730	9290.2526	-2.95	2.44
-28	12735.8378	10531.3695	8700.6388	-2.93	2.44
-27	11885.1336	9847.7240	8152.2338	-2.92	2.43
-26	11096.6531	9212.8101	7641.8972	-2.91	2.42
-25	10365.4565	8622.8491	7166.7474	-2.90	2.42
-24	9687.0270	8074.3787	6724.1389	-2.88	2.41
-23	9057.2314	7564.2244	6311.6413	-2.87	2.41
-22	8472.2852	7089.4741	5927.0206	-2.86	2.40
-21	7928.7217	6647.4547	5568.2222	-2.84	2.39
-20	7423.3626	6235.7109	5233.3554	-2.83	2.39
-19	6953.2930	5851.9864	4920.6791	-2.82	2.38
-18	6515.8375	5494.2064	4628.5894	-2.80	2.37
-17	6108.5393	5160.4621	4355.6078	-2.79	2.37
-16	5729.1413	4848.9963	4100.3708	-2.77	2.36
-15	5375.5683	4558.1906	3861.6201	-2.76	2.35
-14	5045.9114	4286.5535	3638.1938	-2.75	2.34
-13	4738.4141	4032.7098	3429.0191	-2.73	2.34
-12	4451.4586	3795.3910	3233.1039	-2.72	2.33
-11	4183.5548	3573.4260	3049.5312	-2.70	2.32
-10	3933.3289	3365.7336	2877.4527	-2.69	2.31
-9	3699.5139	3171.3148	2716.0828	-2.67	2.30
-8	3480.9407	2989.2460	2564.6945	-2.66	2.29
-7	3276.5302	2818.6731	2422.6139	-2.64	2.28
-6	3085.2854	2658.8058	2289.2164	-2.63	2.28
-5	2906.2851	2508.9126	2163.9230	-2.61	2.27
-4	2738.6777	2368.3158	2046.1961	-2.60	2.26
-3	2581.6752	2236.3876	1935.5371	-2.58	2.25
-2	2434.5487	2112.5459	1831.4826	-2.56	2.24
-1	2296.6230	1996.2509	1733.6024	-2.55	2.23
0	2167.2730	1887.0018	1641.4966	-2.53	2.22
1	2045.9191	1784.3336	1554.7931	-2.52	2.21
2	1932.0242	1687.8144	1473.1460	-2.50	2.20
3	1825.0899	1597.0431	1396.2333	-2.48	2.19
4	1724.6540	1511.6468	1323.7551	-2.47	2.17
5	1630.2870	1431.2787	1255.4324	-2.45	2.16
6	1541.5904	1355.6163	1191.0048	-2.43	2.15
7	1458.1938	1284.3593	1130.2298	-2.41	2.14
8	1379.7528	1217.2282	1072.8813	-2.40	2.13

Все каталоги и инструкции здесь: https://splitsystema48.ru/instrukcii-po-ekspluatacii-kondicionerov.html

9	1305.9472	1153.9626	1018.7481	-2.38	2.12
10	1236.4792	1094.3200	967.6334	-2.36	2.11
11	1171.0715	1038.0743	919.3533	-2.35	2.09
12	1109.4661	985.0146	873.7359	-2.33	2.08
13	1051.4226	934.9440	830.6210	-2.31	2.07
14	996.7169	887.6792	789.8583	-2.29	2.06
15	945.1404	843.0486	751.3077	-2.27	2.04
16	896.4981	800.8922	714.8380	-2.26	2.03
17	850.6086	761.0603	680.3265	-2.24	2.02
18	807.3024	723.4134	647.6580	-2.22	2.00
19	766.4212	687.8205	616.7252	-2.20	1.99
20	727.8172	654.1596	587.4271	-2.18	1.98
21	691.3524	622.3161	559.6694	-2.16	1.96
22	656.8979	592.1831	533.3634	-2.14	1.95
23	624.3328	563.6604	508.4261	-2.12	1.93
24	593.5446	536.6540	484.7796	-2.10	1.92
25	564.4275	511.0760	462.3510	-2.09	1.90
26	536.9865	486.9352	441.1516	-2.07	1.89
27	511.0105	464.0500	421.0258	-2.05	1.87
28	486.4151	442.3499	401.9146	-2.03	1.86
29	463.1208	421.7683	383.7626	-2.01	1.84
30	441.0535	402.2430	366.5175	-1.99	1.83
31	420.1431	383.7151	350.1301	-1.97	1.81
32	400.3242	366.1295	334.5542	-1.95	1.80
33	381.5350	349.4341	319.7460	-1.93	1.78
34	363.7176	333.5801	305.6645	-1.90	1.76
35	346.8176	318.5216	292.2709	-1.88	1.75
36	330.7839	304.2151	279.5286	-1.86	1.73
37	315.5682	290.6199	267.4031	-1.84	1.71
38	301.1254	277.6976	255.8620	-1.82	1.70
39	287.4128	265.4119	244.8745	-1.80	1.68
40	274.3905	253.7288	234.4118	-1.78	1.66
41	262.0206	242.6161	224.4465	-1.76	1.64
42	250.2676	232.0436	214.9529	-1.74	1.63
43	239.0983	221.9825	205.9065	-1.71	1.61
44	228.4809	212.4060	197.2844	-1.69	1.59
45	218.3860	203.2887	189.0648	-1.67	1.57
46	208.7855	194.6066	181.2273	-1.65	1.55
47	199.6531	186.3369	173.7524	-1.63	1.54
48	190.9639	178.4584	166.6217	-1.60	1.52
49	182.6945	170.9508	159.8181	-1.58	1.50
50	174.8228	163.7951	153.3249	-1.56	1.48
51	167.3280	156.9733	147.1268	-1.53	1.46
52	160.1904	150.4683	141.2090	-1.51	1.44
53	153.3914	144.2641	135.5577	-1.49	1.42

Все каталоги и инструкции здесь: https://splitsystema48.ru/instrukcii-po-ekspluatacii-kondicionerov.html

54	146.9136	138.3454	130.1598	-1.47	1.40
55	140.7403	132.6980	125.0027	-1.44	1.38
56	134.8559	127.3081	120.0746	-1.42	1.36
57	129.2457	122.1630	115.3645	-1.40	1.34
58	123.8956	117.2504	110.8618	-1.37	1.32
59	118.7926	112.5589	106.5564	-1.35	1.30
60	113.9241	108.0776	102.4388	-1.32	1.28
61	109.2784	103.7961	98.5000	-1.30	1.26
62	104.8443	99.7046	94.7315	-1.28	1.23
63	100.6112	95.7939	91.1253	-1.25	1.21
64	96.5692	92.0553	87.6735	-1.23	1.19
65	92.7088	88.4805	84.3690	-1.20	1.17
66	89.0211	85.0614	81.2048	-1.18	1.15
67	85.4976	81.7908	78.1744	-1.15	1.12
68	82.1303	78.6615	75.2715	-1.13	1.10
69	78.9116	75.6668	72.4902	-1.10	1.08
70	75.8343	72.8004	69.8249	-1.08	1.06
71	72.8916	70.0561	67.2703	-1.05	1.03
72	70.0770	67.4283	64.8213	-1.03	1.01
73	67.3844	64.9115	62.4731	-1.00	0.99
74	64.8080	62.5006	60.2211	-0.98	0.96
75	62.3423	60.1906	58.0609	-0.95	0.94
76	59.9821	57.9770	55.9885	-0.92	0.92
77	57.7223	55.8552	53.9998	-0.90	0.89
78	55.5583	53.8210	52.0912	-0.87	0.87
79	53.4856	51.8706	50.2591	-0.85	0.84
80	51.5000	50.0000	48.5000	-0.85	0.84
81	49.7063	48.2057	46.7083	-0.85	0.85
82	47.9835	46.4842	44.9911	-0.89	0.89
83	46.3286	44.8323	43.3452	-0.93	0.92
84	44.7385	43.2468	41.7672	-0.96	0.95
85	43.2105	41.7248	40.2540	-1.00	0.99
86	41.7386	40.2604	38.7996	-1.03	1.02
87	40.3241	38.8545	37.4048	-1.07	1.06
88	38.9643	37.5045	36.0668	-1.11	1.09
89	37.6569	36.2078	34.7831	-1.14	1.13
90	36.3996	34.9622	33.5513	-1.18	1.16
91	35.1903	33.7653	32.3689	-1.22	1.19
92	34.0269	32.6151	31.2338	-1.26	1.23
93	32.9075	31.5096	30.1438	-1.30	1.27
94	31.8302	30.4467	29.0970	-1.33	1.30
95	30.7933	29.4246	28.0915	-1.37	1.34
96	29.7950	28.4417	27.1254	-1.41	1.37
97	28.8337	27.4961	26.1970	-1.45	1.41
98	27.9078	26.5864	25.3048	-1.49	1.44

Все каталоги и инструкции здесь: https://splitsystema48.ru/instrukcii-po-ekspluatacii-kondicionerov.html

99	27.0160	25.7110	24.4470	-1.53	1.48
100	26.1569	24.8685	23.6222	-1.57	1.52
101	25.3290	24.0574	22.8291	-1.61	1.55
102	24.5311	23.2765	22.0662	-1.65	1.59
103	23.7620	22.5245	21.3323	-1.69	1.63
104	23.0205	21.8002	20.6261	-1.73	1.66
105	22.3055	21.1025	19.9465	-1.77	1.70
106	21.6159	20.4303	19.2924	-1.81	1.74
107	20.9508	19.7825	18.6626	-1.85	1.77
108	20.3091	19.1582	18.0563	-1.89	1.81
109	19.6899	18.5564	17.4723	-1.93	1.85
110	19.0924	17.9761	16.9098	-1.98	1.89
111	18.5157	17.4166	16.3680	-2.02	1.93
112	17.9590	16.8769	15.8458	-2.06	1.96
113	17.4214	16.3564	15.3427	-2.10	2.00
114	16.9023	15.8542	14.8577	-2.15	2.04
115	16.4010	15.3696	14.3902	-2.19	2.08
116	15.9167	14.9020	13.9394	-2.23	2.12
117	15.4489	14.4506	13.5047	-2.27	2.16
118	14.9968	14.0149	13.0855	-2.32	2.19
119	14.5599	13.5942	12.6811	-2.36	2.23
120	14.1376	13.1879	12.2909	-2.41	2.27
121	13.7294	12.7955	11.9144	-2.45	2.31
122	13.3347	12.4165	11.5510	-2.50	2.35
123	12.9531	12.0503	11.2003	-2.54	2.39
124	12.5840	11.6965	10.8617	-2.58	2.43
125	12.2270	11.3545	10.5348	-2.63	2.47
126	11.8817	11.0240	10.2191	-2.68	2.51
127	11.5475	10.7046	9.9142	-2.72	2.55
128	11.2242	10.3957	9.6197	-2.77	2.59
129	10.9112	10.0970	9.3352	-2.81	2.63
130	10.6084	9.8082	9.0602	-2.86	2.67
131	10.3151	9.5288	8.7945	-2.91	2.71
132	10.0312	9.2586	8.5378	-2.95	2.75
133	9.7563	8.9971	8.2895	-3.00	2.80
134	9.4901	8.7441	8.0495	-3.05	2.84
135	9.2322	8.4993	7.8175	-3.09	2.88
136	8.9824	8.2623	7.5931	-3.14	2.92
137	8.7404	8.0329	7.3760	-3.19	2.96
138	8.5059	7.8108	7.1660	-3.24	3.00
139	8.2787	7.5958	6.9629	-3.29	3.04
140	8.0584	7.3875	6.7664	-3.33	3.09

Все каталоги и инструкции здесь: https://splitsystema48.ru/instrukcii-po-ekspluatacii-kondicionerov.html

6. System Configuration

6.1 System Configuration

After the installation and test operation of the room air conditioner have been completed, it should be operated and handled as described below. Every user would like to know the correct method of operation of the room air conditioner, to check if it is capable of cooling (or heating) well, and to know a clever method of using it.In order to meet this expectation of the users, giving sufficient explanations taking enough time can be said to reduce about 80% of the requests for servicing. However good the installation work is and however good the functions are, the customer may blame either the room air conditioner or its installation work because of improper handling. The installation work and handing over of the unit can only be considered to have been completed when its handling has been explained to the user without using technical terms but giving full knowledge of the equipment.

6.2 Instruction

Все каталоги и инструкции здесь:

Cautions

Disposal of the old air conditioner

Before disposing an old air conditioner that goes out of use, please make sure it's inoperative and safe. Unplug the air conditioner in order to avoid the risk of child entrapment.

It must be noticed that air conditioner system contains refrigerants, which require specialized waste disposal. The valuable materials contained in an air conditioner can be recycled .Contact your local waste disposal center for proper disposal of an old air conditioner and contact your local authority or your dealer if you have any question. Please ensure that the pipework of your air conditioner does not get damagedprior to being picked up by the relevant waste disposal center, and contribute to environmental awareness by insisting on an appropriate, anti-pollution method of disposal.

Disposal of the packaging of your new air conditioner

All the packaging materials employed in the package of your new air conditioner may be disposed without any danger to the environment.

The cardboard box may be broken or cut into smaller pieces and given to a waste paper disposal service. The wrapping bag made of polyethylene and the polyethylene foam pads contain no fluorochloric hydrocarbon.

All these valuable materials may be taken to a waste collecting center and used again after adequate recycling.

Consult your local authorities for the name and address of the waste materials collecting centers and waste paper disposal services nearest to your house.

Safety Instructions and Warnings

Before starting the air conditioner, read the information given in the User's Guide carefully. The User's Guide contains very important observations relating to the assembly, operation and maintenance of the air conditioner.

The manufacturer does not accept responsibility for any damages that may arise due to non-observation of the following instruction.

- Damaged air conditioners are not to be put into operation. In case of doubt, consult your supplier.
- Use of the air conditioner is to be carried out in strict compliance with the relative instructions set forth in the User's Guide.
- Installation shall be done by professional people, don't install unit by yourself.
- For the purpose of the safety,the air conditioner must be properly grounded in accordance with specifications.
- Always remember to unplug the air conditioner before openning inlet grill. Never unplug your air conditioner by pulling on the power cord. Always grip plug firmly and pull straight out from the outlet.
- All electrical repairs must be carried out by qualified electricians. Inadequate repairs may result in a major source of danger for the user of the air conditioner.
- Do not damage any parts of the air conditioner that carry refrigerant by piercing or performating the air conditioner's tubes with sharp or pointed items, crushing or twisting any tubes, or scraping the coatings off the surfaces. If the refrigerant spurts out and gets into eyes, it may result in serious eye injuries.

Все каталоги и инструкции здесь: https://splitsystema48.ru/instrukcii-po-ekspluatacii-kondicionerov.html

Cautions

- Do not obstruct or cover the ventilation grille of the air conditoner.Do not put fingers or any other things into the inlet/outlet and swing louver.

- Do not allow children to play with the air conditioner.In no case should children be allowed to sit on the outdoor unit.

Specifications

- The refrigerating circuit is leak-proof.

The machine is adaptive in following situation

1.Applicable ambient temperature range:

Cooling	Indoor	Maximum:D.B/W.B	32°C/23°C
		Minimum:D.B/W.B	18°C/14°C43
	Outdoor	Maximum:D.B/W.B	43°C/26°C
		Minimum:D.B	18°C
Heating	Indoor	Maximum:D.B	27°C
		Minimum:D.B	15°C
	Outdoor	Maximum:D.B/W.B	24°C/18°C
		Minimum:D.B/W.B	-7°C/-8°C

2. If the power supply cord is damaged, it must be replaced by the manufacturer or its service agent or a similar qualified person.

3. If the fuse of indoor unit on PC board is broken,please change it with the type of T. 3.15A/ 250V.

4. The wiring method should be in line with the local wiring standard.

5. After installation, the power plug should be easily reached.

6. The waste battery should be disposed properly.

7. The appliance is not intended for use by young children or infirm persons without supervision.

8. Young children should be supervised to ensure that they do not play with the applience.

9.Please employ the proper power plug, which fit into the power supply cord.

10 .The power plug and connecting cable must have acquired the local attestation.

11.In order to protect the units,please turn off the A/C first, and at least 30 seconds later, cutting off the power.

Все каталоги и инструкции здесь: https://splitsystema48.ru/instrukcii-po-ekspluatacii-kondicionerov.html

Parts and Functions

Indoor Unit

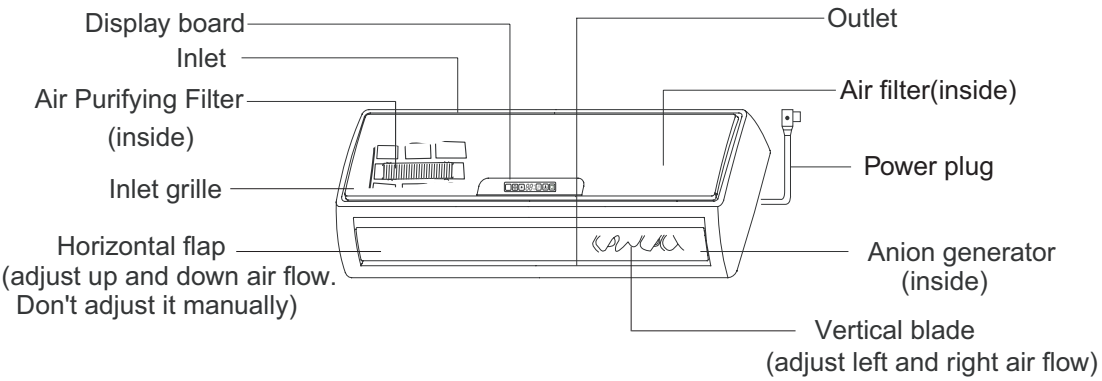

Actual inlet grille may vary from the one shown in the manual according to the product purchased

Outdoor Unit

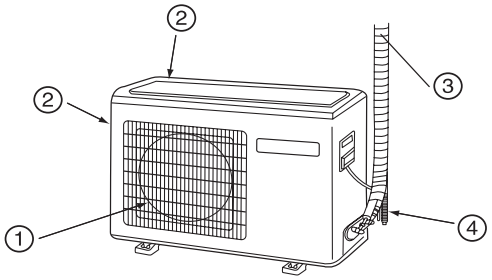

HSU-09HEA03/(BP)

HSU-12HEA03/(BP)

① OUTLET
② INLET
③ CONNECTING PIPING AND ELECTRICAL WIRING
④ DRAIN HOSE

Все каталоги и инструкции здесь: https://splitsystema48.ru/instrukcii-po-ekspluatacii-kondicionerov.html

4Parts and Functions

Remote controller

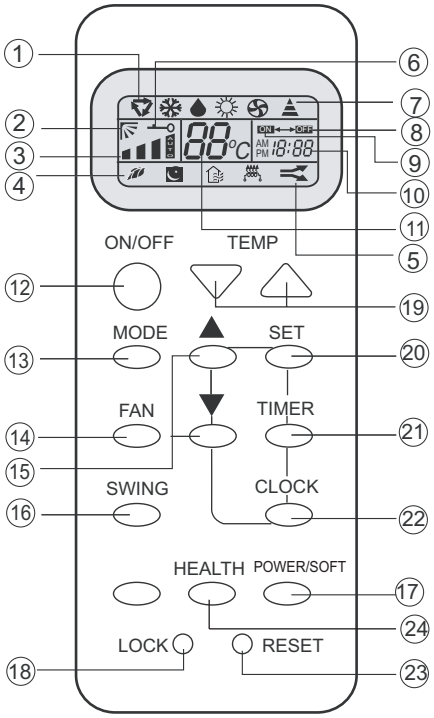

1. Operation mode display

Operation mode	COOL	DRY	HEAT
Remote controller	❄	💧	☀
Display board	❄	💧	☀

2. SWING display
3. FAN SPEED display
4. HEALTH display
5. POWER/SOFT display
6. LOCK display

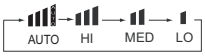

Display board

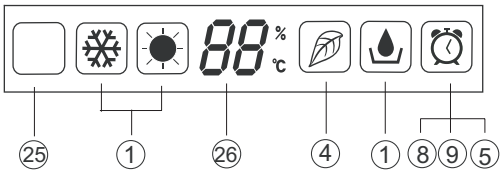

7. SIGNAL SENDING display
8. TIMER OFF display
9. TIMER ON display
10. CLOCK display
11. TEMP display
12. POWER ON/OFF
    Used for unit start and stop.
13. MODE
    Used to select COOL, DRY, HEAT operation
14. FAN
    Used to select fan speed AUTO, HI, MED, LO
15. HOUR
    Used to set clock and timer setting.
16. SWING
    Used to set auto fan direction.
17. POWER/SOFT button
18. LOCK
    Used to lock buttons and LCD display.
19. TEMP.
    Used to select your desired temp.
20. SET
    Used to confirm timer and clock settings.
21. TIMER
    Used to select TIMER ON, TIMER OFF,
22. CLOCK
    Used to set correct time
23. RESET
    Used to reset the controller back to normal condition.
24. HEALTH
    Used to operate the healthy function
25. Singal receiver hole
26. Ambient temp.display
    When receiving the remote control signal, display the set temperature and in the rest time the room temperature is displayed and this room temperature is only for reference.

Clock set

When unit is started for the first time and after replacing batteries in remote controller, clock should be adjusted as follows:
Press CLOCK button, "AM" or "PM" flashes.
Press △ or ▽ to set correct time. Each press will increase or decrease 1min. If the button is kept depressed, time will change quickly.
After time setting is confirmed, press SET, "AM "and "PM" stop flashing, while clock starts working.

Все каталоги и инструкции здесь: https://splitsystema48.ru/instrukcii-po-ekspluatacii-kondicionerov.html

Operation

Remote controller's operation

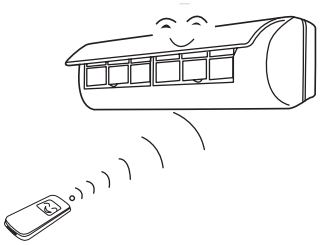

- When in use, put the signal transmission head directly to the receiver hole on the indoor unit.
- The distance between the signal transmission head and the receiver hole should be within 7m without any obstacle as well.
- Don't throw the controller, prevent it from being damaged.
- When electronic-started type fluorescent lamp or change-over type fluorescent lamp or wireless telephone is installed in the room, the receiver is apt to be disturbed in receivering the signals so the distance to the indoor unit should be shorter.

Loading of the battery

Load the batteries as illustrated. 2 R-03 batteries, resetting key (cylinder)

Remove the battery cover:

Slightly press "▼" and push down the cove r.

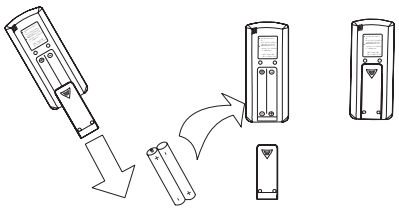

Load the battery:

Be sure that the loading is in line with the" + "/"-" pole request as illustrated.

Put on the cover again

Confirmation indicator:

In disorderation, reload the batteries or load the new batteries after 6mins.

Note:

Use two new same-typed batteries when loading.
If the remote controller can't run normally or doesn't work at all, use a sharp pointed item to press the reset key.

Hint:

Remove the batteries in case unit won't be in usage for a long period.
If there are any display after taking-out just need to press reset key.

Power failure resume(please set and apply as necessary)

If sudden power failure occurs, the unit will resume original operation when power is supplied again.

Note: When sudden power failure happens during unit operation in power failure resume mode, if the air conditioner is not desired for use in a long period, please shut off the power supply in case that the unit automatically resume operation when power is re-supplied, or press ON/OFF to turn off the unit when power resumes.

Все каталоги и инструкции здесь: https://splitsystema48.ru/instrukcii-po-ekspluatacii-kondicionerov.html

Operation

Cool Operation

(1) Unit start

Press ON/OFF button, unit starts.
Previous operation status appears on display. (Not Timer setting)

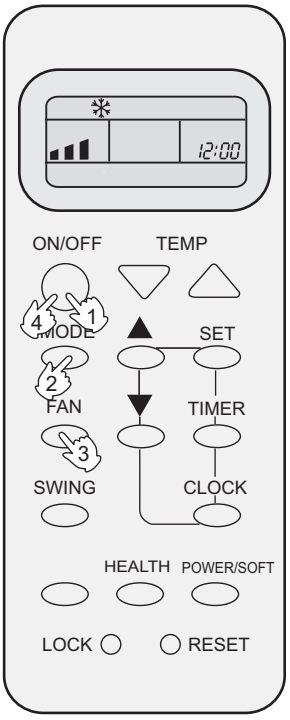

(2) Select operation mode

Press MODE button. For each press, operation mode changes as follows:

Unit will run in operation mode displayed on LCD.
Stop display at your desired mode.

(3) Select temp. setting

Press TEMP button.
△ Every time the button is pressed, temp. setting increases 1°C
▽ Every time the button is pressed, temp. setting decreases 1°C
Unit will start running to reach the temp. setting on LCD.

(4) Fan speed selection

Press FAN button. For each press, fan speed changes as follows:
Remote controller:

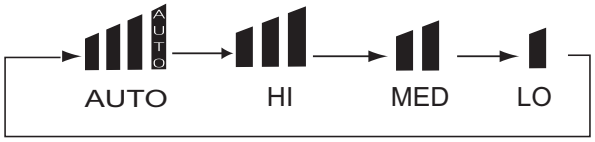

Air conditioner is running under displayed fan speed.
Air conditioner is running under displayed fan speed.

(5) Unit stop

Press ON/OFF button, the unit stops.

Hints

On cooling only unit, heating mode is not available.
Remote controller can memorize each operation status. When starting it next time, just press ON/OFF button and unit will run in previous status.
No reelecting is needed.(TIMER ON/OFF、SWING needs reelecting)

Все каталоги и инструкции здесь: https://splitsystema48.ru/instrukcii-po-ekspluatacii-kondicionerov.html

Operation

Heat Operation

(1) Unit start

Press ON/OFF button, unit starts.
Previous operation status appears on display. (Not Timer setting)

(2) Select operation mode

Press MODE button. For each press, operation mode changes as follows:

Unit will run in operation mode displayed on LCD.
Stop display at your desired mode.

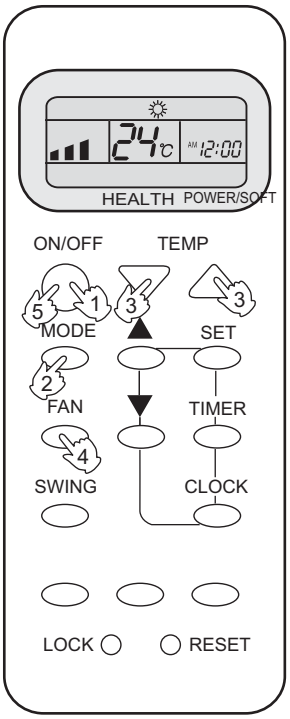

(3) Select temp. setting

Press TEMP button.
△ Every time the button is pressed, temp. setting increases 1°C
▽ Every time the button is pressed, temp. setting decreases 1°C
Unit will start running to reach the temp. setting on LCD.

(4) Fan speed selection

Press FAN button. For each press, fan speed changes as follows:
Remote controller:

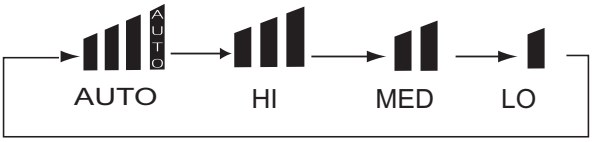

IN HEAT mode, warm air will blow out after a short period of the time due to cold-draft prevention function.

(5) Unit stop

Press ON/OFF button, the unit stops.

Hints

Remote controller can memorize each operation status. When starting it next time, just press ON/OFF button and unit will run in previous status.

Все каталоги и инструкции здесь: https://splitsystema48.ru/instrukcii-po-ekspluatacii-kondicionerov.html

Operation

Dry Operation

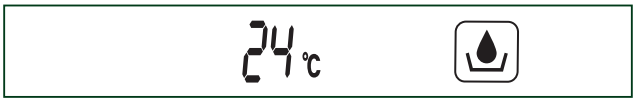

(1) Unit start

Press ON/OFF button, unit starts.

(2) Select operation mode

Press MODE button. For each press, operation mode changes as follows:

Unit will run in operation mode displayed on LCD.
Stop display at your desired mode.

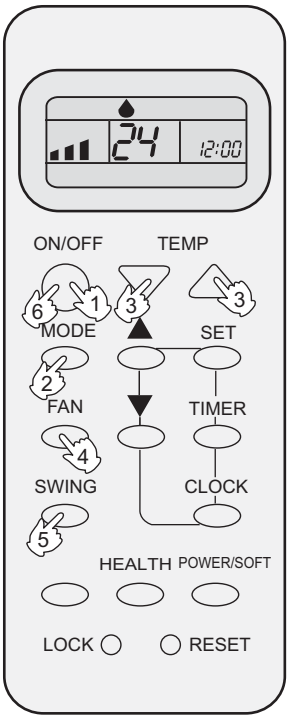

(3) Select temp. setting

Press TEMP button.

△ Every time the button is pressed, temp. setting increases 1°C

▽ Every time the button is pressed, temp. setting decreases 1°C

Unit will start running to reach the temp. setting on LCD.

(4) Fan speed selection

Press FAN button. For each press, fan speed changes as follows:

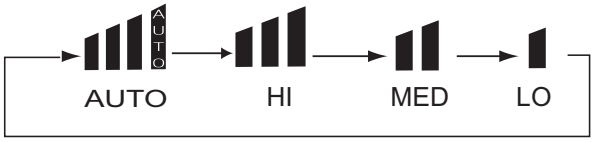

Unit runs at the speed displayed on LCD.

In DRY mode, when room temperature becomes lower than temp.setting+2°C,unit will run intermittently at LOW speed regardless of FAN setting.

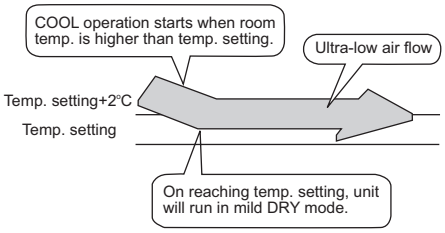

Hints

Remote controller can memorize each operation status. When starting it next time, just press ON/OFF button and unit will run in previous status.

Все каталоги и инструкции здесь: https://splitsystema48.ru/instrukcii-po-ekspluatacii-kondicionerov.html

Operation

(5) Air flow direction adjustment

After operation mode is selected, horizontal flap will open automatically according to the mode. Referring to the Fig.

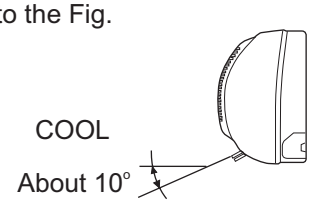

Up and down (Use remote controller)

Press SWING button, horizontal flap will move within the range shown in the Fig. Press SWING button stop it at a fixed position.

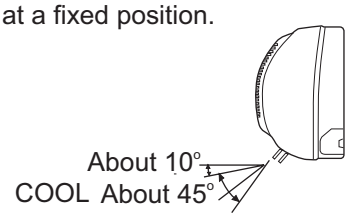

Left and right air flow adjustment (manual)

Move the vertical blade by a knob on air conditioner to adjust left and right direction referring to Fig.

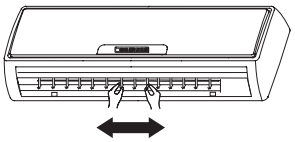

Cautions:
It is advisable not to keep horizontal flap at downward position for a long time in COOL or DRY mode, otherwise, condensate water might occur.

Cautions:
When humidity is high, condensate water might occur at air outlet if all vertical louvers are adjusted to left or right.

(6) Unit stop

Press ON/OFF button.
Only time remains on LCD.
All indicators on indoor unit go out.
Horizontal flap closes automatically.

Cautions:
Unit won't restart until 3 minutes have elapsed, due to system protection.

Hints
As cold air flows downward in COOL mode, adjusting air flow horizontally will be much more helpful for a better air circulation.
Be careful not to catch a cold when cold air blows downward.
It is harmful to your health in summer to go frequently in and out of places where temp. difference is above 7°C. Temp. difference of 3-5°C will remove your fatigue.
More than this, unit's load can be reduced and power consumption cut down as well. So, you'd better set a temp. difference of 3-5°C between indoor and outdoor temp. in COOL mode.

Все каталоги и инструкции здесь: https://splitsystema48.ru/instrukcii-po-ekspluatacii-kondicionerov.html

Operation

TIMER Operation

Set Clock correctly before starting Timer operation
You can let unit start or stop automatically at following times: Before you wake up in the morning, or get back from outside or after you fall asleep at night.

TIMER ON/OFF

(1)After unit start, select your desired operation mode.
Operation mode will be displayed on LCD.
Power indicator on indoor unit lights up.

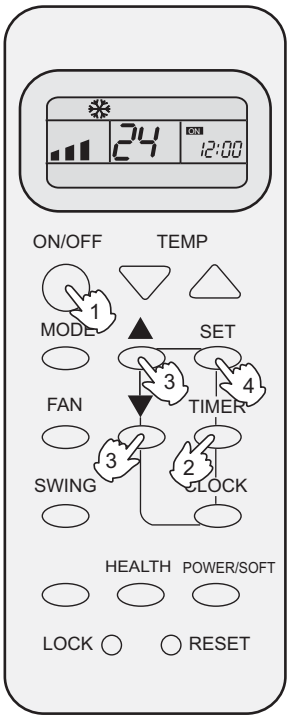

(2)TIMER mode selection
Press TIMER button to change TIMER mode.
Every time the button is pressed, display changes as follows:

ON → OFF → blank
TIMER ON TIMER OFF

Select your desired TIMER mode (TIMER ON or TIMER OFF) ON or OFF will flash.

(3)Timer setting
Press HOUR△ / ▽ button.
△ Every time the button is pressed, time increases 1 hour. If button is kept depressed, time will change quickly.
▽ Every time the button is pressed, time decreases 1 hour. If button is kept depressed, time will change quickly. Time will be shown on LCD. It can be adjusted within 24 hours.

(4)Confirming your setting
After setting correct time, press SET button to confirm, "ON" or "OFF" stops flashing
Time displayed: Unit starts or stops at x hour . (TIMER ON or TIMER OFF).
Timer mode indicator on indoor unit lights up.

To cancel TIMER mode

Just press TIMER button several times until TIMER mode disappears.

Hints

After replacing batteries or a power failure happens, Time setting should be reset.
Remote controller possesses memory function, when use TIMER mode next time, just press SET button after mode selecting if timer setting is the same as previous one.

Все каталоги и инструкции здесь: https://splitsystema48.ru/instrukcii-po-ekspluatacii-kondicionerov.html

Operation

HEALTH Operation

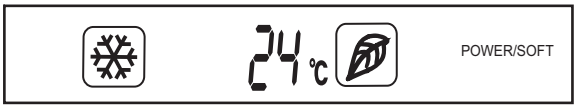

1.Unit start

Press the ON/OFF switch

2.Health anion function

Press the " HEALTH"once, " " is displayed, now the air conditioner is operating the healthy function.

3.To Cancel HEALTH Model

Press the " HEALTH"again, then the healthy function stops.

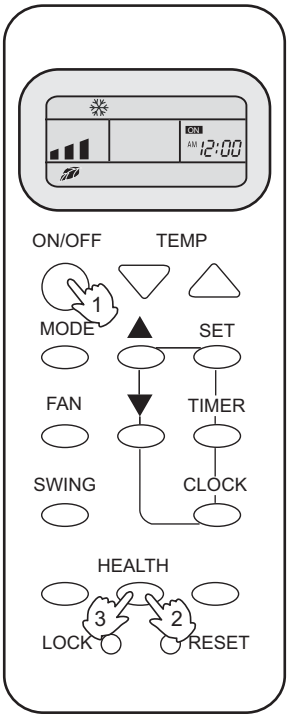

Brief introduction to health anion function

The anion generator in the air conditioner can generate a lot of anion effectively balance the quantity of position and anion in the air and also to kill bacteria and speed up the dust sediment in the room and finally clean the air in the room.

Все каталоги и инструкции здесь: https://splitsystema48.ru/instrukcii-po-ekspluatacii-kondicionerov.html

Operation

POWER/SOFT Operation

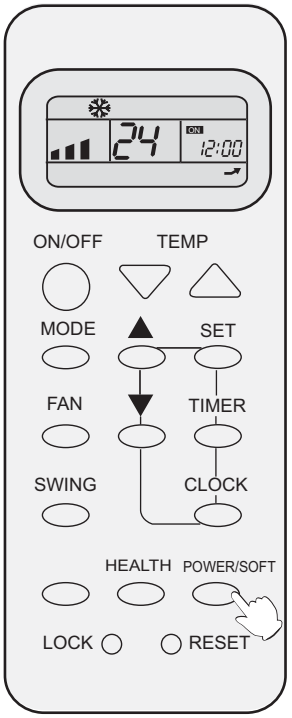

POWER Operation

When you need rapid heating or cooling, you can use this funciton.

Selecting of POWER operation

Press POWER/SOFT button. Every time the button is pressed,display changes as follows:

→ POWER → SOFT → BLANK

Stop the display at" ↗ ".

In POWER operation status:

In COOL mode, fan speed automatically runs in HI mode for 15 min then returns to original status setting.

To cancel POWER operation

Press POWER/SOFT button twice ,POWER/SOFT disappears.

SOFT Operation

You can use this function when silence is needed for rest or reading.

Selecting of SOFT operation

Press POWER/SOFT button. Every time the button is pressed,display changes as follows:

→ POWER → SOFT → BLANK

Stop the display at " ↘ ".

In SOFT operation mode, fan speed automatically takes"LOW"

To cancel POWER operation

Press POWER/SOFT button twice ,POWER/SOFT disappears.

Hints:

During POWER operation, in rapid COOL mode, the roor will show inhomogeneous temperature distribution.

Long period SOFT operation will cause effect of not too cool.

Все каталоги и инструкции здесь: https://splitsystema48.ru/instrukcii-po-ekspluatacii-kondicionerov.html

Operation

HEALTH Operation

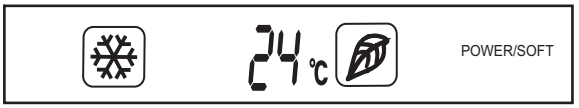

1.Unit start

Press the ON/OFF switch

2.Health anion function

Press the " HEALTH"once, " " is displayed, now the air conditioner is operating the healthy function.

3.To Cancel HEALTH Model

Press the " HEALTH"again, then the healthy function stops.

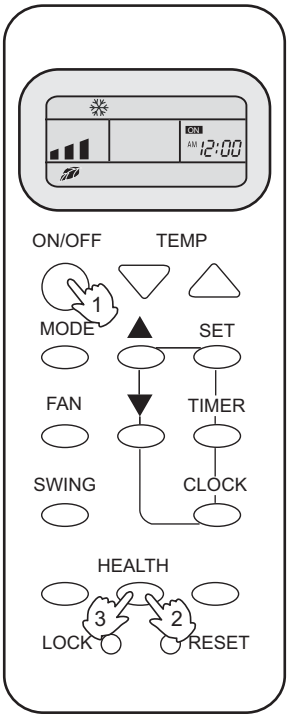

Brief introduction to health anion function

The anion generator in the air conditioner can generate a lot of anion effectively balance the quantity of position and anion in the air and also to kill bacteria and speed up the dust sediment in the room and finally clean the air in the room.

Все каталоги и инструкции здесь: https://splitsystema48.ru/instrukcii-po-ekspluatacii-kondicionerov.html

Maintenance

Replacement of Air Purifying Filter

1.Open the Inlet Grille

Prop up the inlet grille by using a small device named grille-support which located in the right side of the indoor unit.

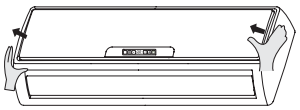

2.Detach the standard air filter

Slide the knob slightly upward to release the filter, then withdraw it.

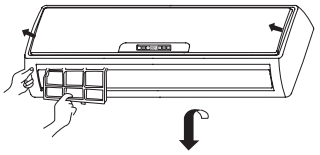

3.Attach Air Purifying Filter

Put air purifying filter appliances into the right and left filter frames.

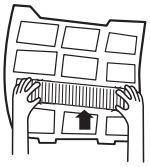

4.Attach the standard air filter

(Necessary installation)

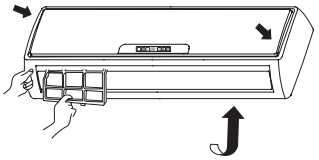

ATTENTION:
The white side of the photocatalyst air purifying filter face outside, and the black side face the unit.
The green side of the bacteria-killing medium air purifying filter face outside, and the white side face the unit.

5.Close the Inlet Grille

Close the Grille surely

NOTE:

- The photocatalyst air purifying filter will be solarized in fixed time. In normal family, it will be solarized every 6 months.
- The bacteria-killing medium air purifying filter will be used for a long time,no need for replacement. But in the period of using them ,you should remove the dust frequently by using vacuum cleaner or flaping them lightly,otherwise ,its performance will be affected.
- Please keep the bacteria-killing medium air purifying filter in the cool and dry conditions avoid long time directly sunshine when you stop using it,or its ability of sterilization will be reduced.

Все каталоги и инструкции здесь: https://splitsystema48.ru/instrukcii-po-ekspluatacii-kondicionerov.html

Maintenance

For Smart Use of The Air Conditioner

Setting of proper room temperature

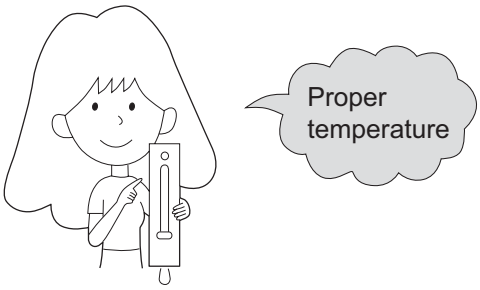

Do not block the air inlet or outlet

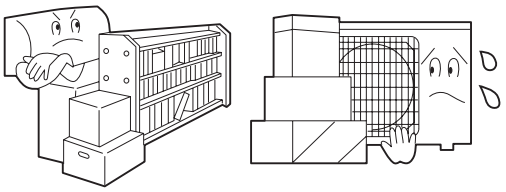

Close doors and windows during operation

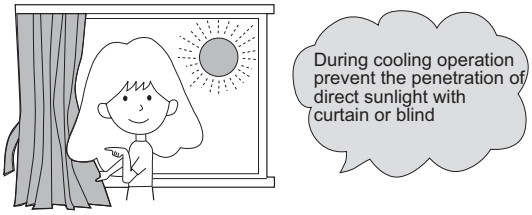

Use the timer effectively

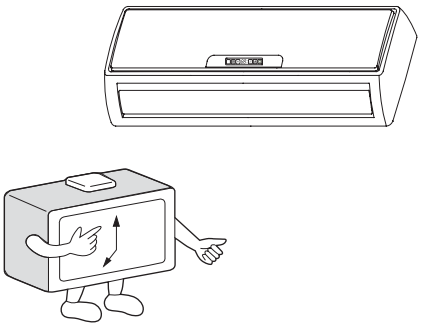

If the unit is not to be used for a long time, turn off the power supply main switch.

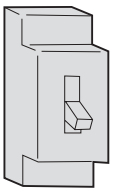

OFF

Use the louvers effectively

Все каталоги и инструкции здесь: https://splitsystema48.ru/instrukcii-po-ekspluatacii-kondicionerov.html

Cautions

Safety Instruction

- Please read the following Safety Instructions carefully prior to use.
- The instructions are classified into two levels, WARNING and CAUTION according to the seriousness of possible risks and damages as follows. Compliance to the instructions are strictly required for safety use.

Installation

⚠ WARNING

Please call Sales/Service Shop for the Installation.
Do not attempt to install the air conditioner by yourself because improper works may cause electric shock, fire, water leakage.

Installation in a inadequate place may cause accidents. Do not install in the following place.

⚠ CAUTION

Connect the earth cable.	Do not install in the place where there is any possibility of inflammable gas leakage around the unit.	Do not get the unit exposed to vapor or oil steam.	Check proper installation of the drainage securely
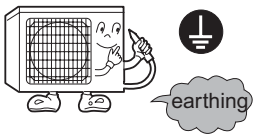	PROHIBITION	PROHIBITION	STRICT ENFORCEMENT

Все каталоги и инструкции здесь: https://splitsystema48.ru/instrukcii-po-ekspluatacii-kondicionerov.html

Cautions

⚠ WARNING

When abnormality such as burnt-small found, immediately stop the operation button and contact sales shop.

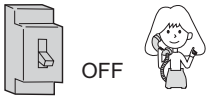

STRICT ENFORCEMENT

Use an exclusive power source with a circuit breaker

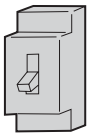

Connect power supply cord to the outlet completely

STRICT ENFORCEMENT

Use the proper voltage

STRICT ENFORCEMENT

Do not use power supply cord extended or connected in halfway

PROHIBITION

Do not use power supply cord in a bundle.

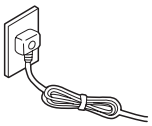

PROHIBITION

Take care not to damage the power supply cord.

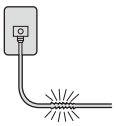

PROHIBITION

Do not insert objects into the air inlet or outlet.

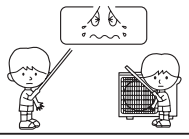

PROHIBITION

Do not start or stop the operation by disconnecting the power supply cord and so on.

PROHIBITION

Do not channel the air flow directly at people, especially at infants or the aged.

PROHIBITION

Do not try to repair or reconstruct by yourself.

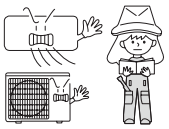

⚠ CAUTION

Do not use for the purpose of storage of food, art work, precise equipment, breeding, or cultivation.

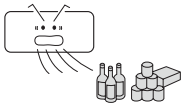

PROHIBITION

Take fresh air occasionally especially when gas appliance is running at the same time.

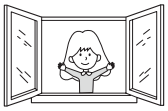

STRICT ENFORCEMENT

Do not operate the switch with wet hand.

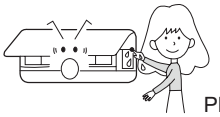

PROHIBITION

Do not install the unit near a fireplace or other heating apparatus.

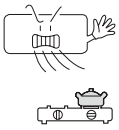

PROHIBITION

Check good condition of the installation stand

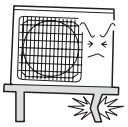

PROHIBITION

Do not pour water onto the unit for cleaning

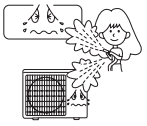

PROHIBITION

Do not place animals or plants in the direct path of the air flow

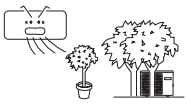

PROHIBITION

Do not place any objects on or climb on the unit.

PROHIBITION

Do not place flower vase or water containers on the top of the unit.

PROHIBITION

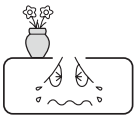

Все каталоги и инструкции здесь: https://splitsystema48.ru/instrukcii-po-ekspluatacii-kondicionerov.html

Trouble shooting

Before asking for service, check the following first.

	Phenomenon	Cause or check points
Normal Performance inspection	The system does not restart immediately.	• When unit is stopped, it won't restart immediately until 3 minutes have elapsed to protect the system. • When the electric plug is pulled out and reinserted, the protection circuit will work for 3 minutes to protect the air conditioner.
	Noise is heard	• During unit operation or at stop, a swishing or gurgling noise may be heard. At first 2-3 minutes after unit start, this noise is more noticeable. (This noise is generated by refrigerant flowing in the system.) • During unit operation, a cracking noise may be heard. This noise is generated by the casing expanding or shrinking because of temperature changes • Should there be a big noise from air flow in unit operation, air filter may be too dirty.
	Smells are generated.	• This is because the system circulates smells from the interior air such as the smell of furniture, paint, cigarettes.
	Mist or steam are blown out.	• During COOL or DRY operation, indoor unit may blow out mist. This is due to the sudden cooling of indoor air.
	In dry mode, fan speed can't be changed.	• In DRY mode, when room temperature becomes lower than temp.setting+2°C,unit will run intermittently at LOW speed regardless of FAN setting.
Multiple check		• Is power plug inserted? • Is there a power failure? • Is fuse blownout?
	Poor cooling	• Is the air filter dirty? Normally it should be cleaned every 15 days. • Are there any obstacles before inlet and outlet? • Is temperature set correctly? • Are there some doors or windows left open? • Is there any direct sunlight through the window during the cooling operation?(Use curtain) • Are there too much heat sources or too many people in the room during cooling operation?

Application temp. range of air conditioner -7°C~43°C.

Haier Все каталоги и инструкции здесь: https://splitsystema48.ru/instrukcii-po-ekspluatacii-kondicionerov.html stic Air Conditioner

7 Service Diagnosis

7.1 Caution for Diagnosis

The operation lamp flashes when any of the following errors is detected.

1. When a protection device of the indoor or outdoor unit is activated or when the thermistor malfunctions, disabling equipment operation.
2. When a signal transmission error occurs between the indoor and outdoor units.In either case, conduct the diagnostic procedure described in the following pages.

7.2.Problem Symptoms and Measures

Symptom	Check Item	Details of Measure
None of the units operates	Check the power supply.	Check to make sure that the rated voltage is supplied.
	Check the indoor PCB	Check to make sure that the indoor PCB is broken
Operation sometimes stops.	Check the power supply.	A power failure of 2 to 10 cycles can stop air conditioner operation.
Equipment operates but does not cool, or does not heat (only for heat pump)	Check for faulty operation of the electronic expansion valve.	Set the units to cooling operation, and compare the temperatures of the liquid side connection pipes of the connection section among rooms to check the opening and closing operation of the electronic expansion valves of the individual units.
	Diagnosis by service port pressure and operating current.	Check for insufficient gas.
Large operating noise and vibrations	Check the installation condition.	Check to make sure that the required spaces for installation (specified in the Technical Guide, etc.) are provided.

Все каталоги и инструкции здесь: https://splitsystema48.ru/instrukcii-po-ekspluatacii-kondicionerov.html

7.4.Error Codes and Description indoor display

	Code indication	Description
	indoor	
Indoor and Outdoor	E7	Communication fault between indoor and outdoor units
Indoor Malfunction	E1	Room temperature sensor failure
	E2	Heat-exchange sensor failure
	E4	Indoor EEPROM error
	E14	Indoor fan motor malfunction
Outdoor Malfunction	F12	Outdoor EEPROM error
	F1	The protection of IPM
	F22	Overcurrent protection of AC electricity for the outdoor model
	F3	Communication fault between the IPM and outdoor PCB
	F19	Power voltage is too high or low
	F4	Overheat protection for exhaust temperature
	F21	Frost-removing temperature sensor failure
	F6	Ambient temperature sensor failure
	F25	Exhaust temperature sensor failure
	F11	deviate from the normal for the compressor
	F28	Loop of the station detect error
	E9	High work-intense protection

Все каталоги и инструкции здесь: https://splitsystema48.ru/instrukcii-po-ekspluatacii-kondicionerov.html

7.4.1Thermistor or Related Abnormality (indoor unit)

Indoor Display

E1: Room temperature sensor failure
E2: Heat-exchange sensor failure

Method of Malfunction Detection

the temperatures detected by the thermistors are used to determine thermistor errors

Malfunction Decision Conditions

when the thermistor input is more than 4.92V or less than 0.08V during compressor operation.

* **Note:** The values vary slightly in some models

Supposed Causes

- Faulty connector connection
- Faulty thermistor
- Faulty PCB

Troubleshooting

* **Caution** Be sure to turn off power switch before connect or disconnect connector, or else parts damage may be occurred.

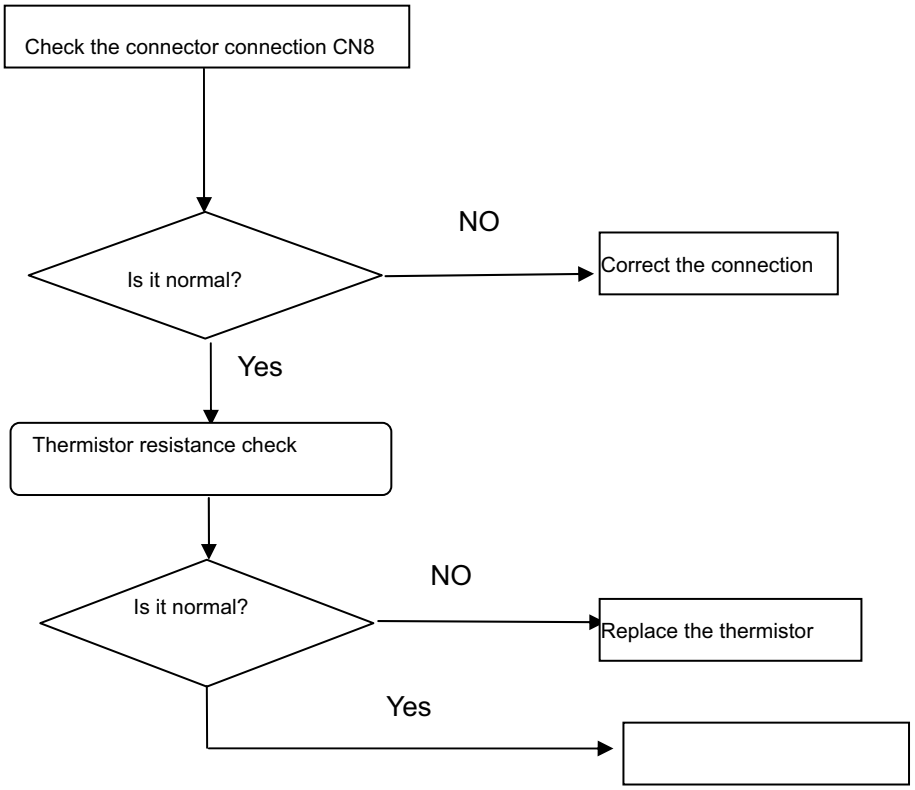

Thermistor resistance check method:

Remove the connector of the thermistor on the PCB, and measure the resistance of thermistor using tester.The relationship between normal temperature and resistance is shown in the value of indoor thermistor.

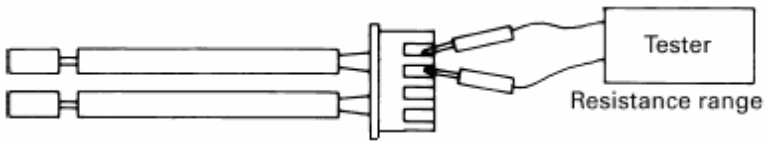

Все каталоги и инструкции здесь: https://splitsystema48.ru/instrukcii-po-ekspluatacii-kondicionerov.html

7.4.2 Indoor fan motor malfunction

Indoor Display **E14**

Method of determine Malfunction Detection The rotation speed detected by the Hall IC during fan motor operation is used to abnormal fan motor operation

Malfunction Decision Conditions when the detected rotation feedback singal don't receiced in 2 minutes

Supposed Causes
- Operation halt due to breaking of wire inside the fan motor .
- Operation halt due to breaking of the fan motor lead wires
- Detection error due to faulty indoor unit PCB

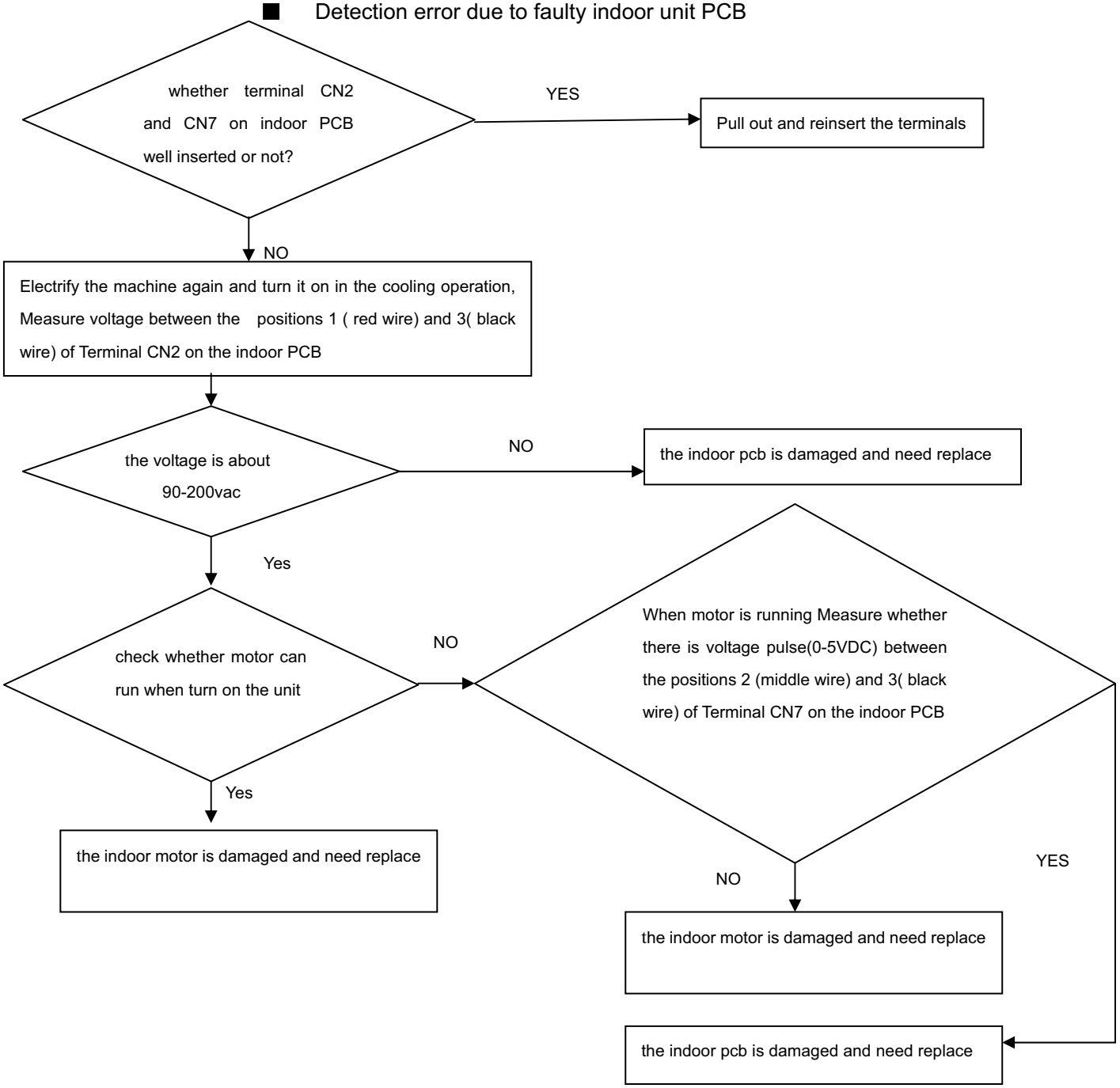

Все каталоги и инструкции здесь: https://splitsystema48.ru/instrukcii-po-ekspluatacii-kondicionerov.html

7.4.3 IPM protection

Indoor Display **F1**

Method of Malfunction Detection IPM protection is detected by checking the compressor running condition and so on.

Malfunction Decision Conditions
- The system leads to IPM protection due to over current
- The compressor faulty leads to IPM protection
- circuit component of IPM is broken and led to IPM protection

Supposed Causes
- IPM protection dues to the compressor faulty
- IPM protection dues to faulty PCB of IPM module
- Compressor wiring disconnected

Troubleshooting *** Caution** Be sure to turn off power switch before connect or disconnect connector, or else parts damage may be occurred.

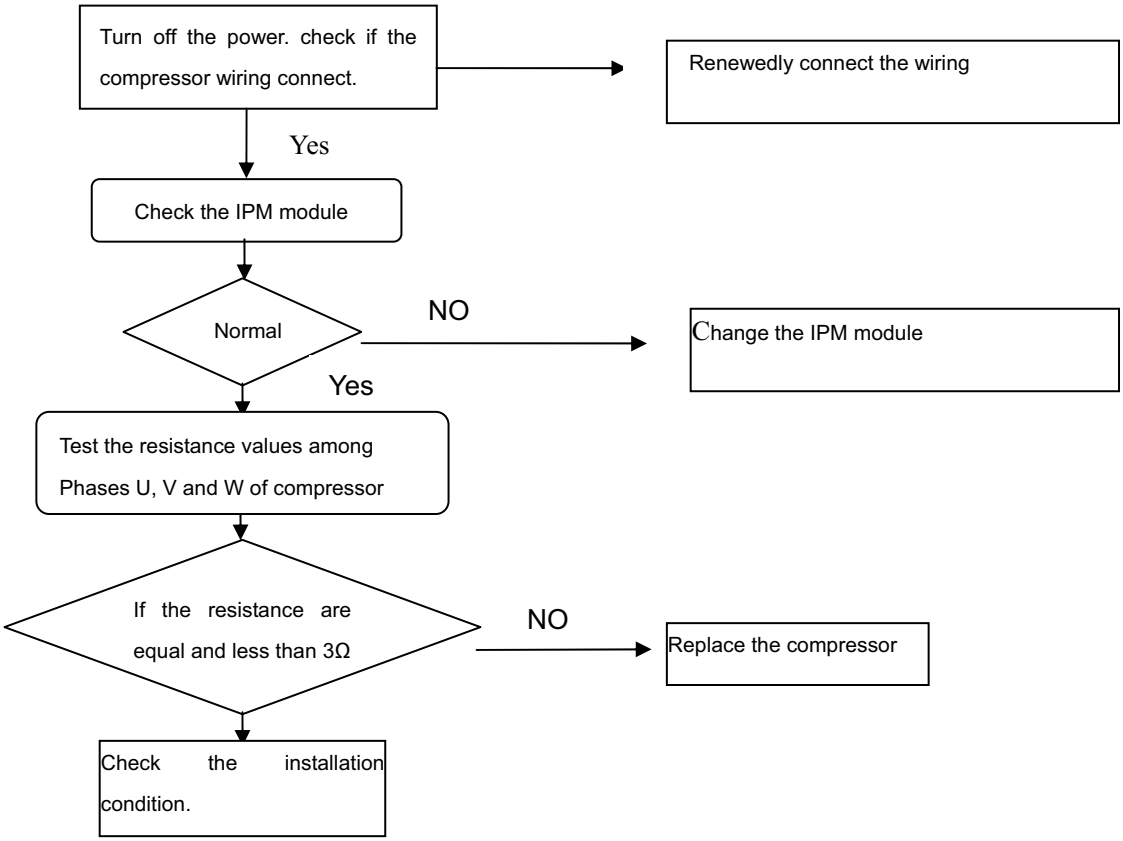

Check the IPM module method:

Disconnect the compressor harness connector from the outdoor unit PCB. To disengage the connector, press the protrusion on the connector.Then, to measure resistance between P (+) andN (-) and the U, V and W terminals of the compressor connector with a multi-tester. Evaluate the measurement results for a pass/fail judgment.

N(-)terminal of tester(P(+)for digital tester)	P(+)	UVW	P(-)	UVW
P(+)terminal of tester(N(-)for digital tester)	UVW	P(+)	UVW	P(-)
Normal resistance	Several kΩ to several MΩ (□)			
Unacceptable resistance	Short (0 Ω) or open			

Все каталоги и инструкции здесь: https://splitsystema48.ru/instrukcii-po-ekspluatacii-kondicionerov.html

7.4.4 The IPM and outdoor PCB don't communicate or Related Abnormality

Indoor Display F3

Method of Malfunction Detection	Communication is detected by checking the IPM module and the outdoor PCB
Malfunction Decision Conditions	■ The outdoor PCB broken leads to communication fault ■ The IPM module broken leads to communication fault
Supposed Causes	■ The outdoor PCB is broken ■ The IPM module is broken ■Communication wiring disconnected
Troubleshooting	* Caution Be sure to turn off power switch before connect or disconnect connector, or else parts damage may be occurred.

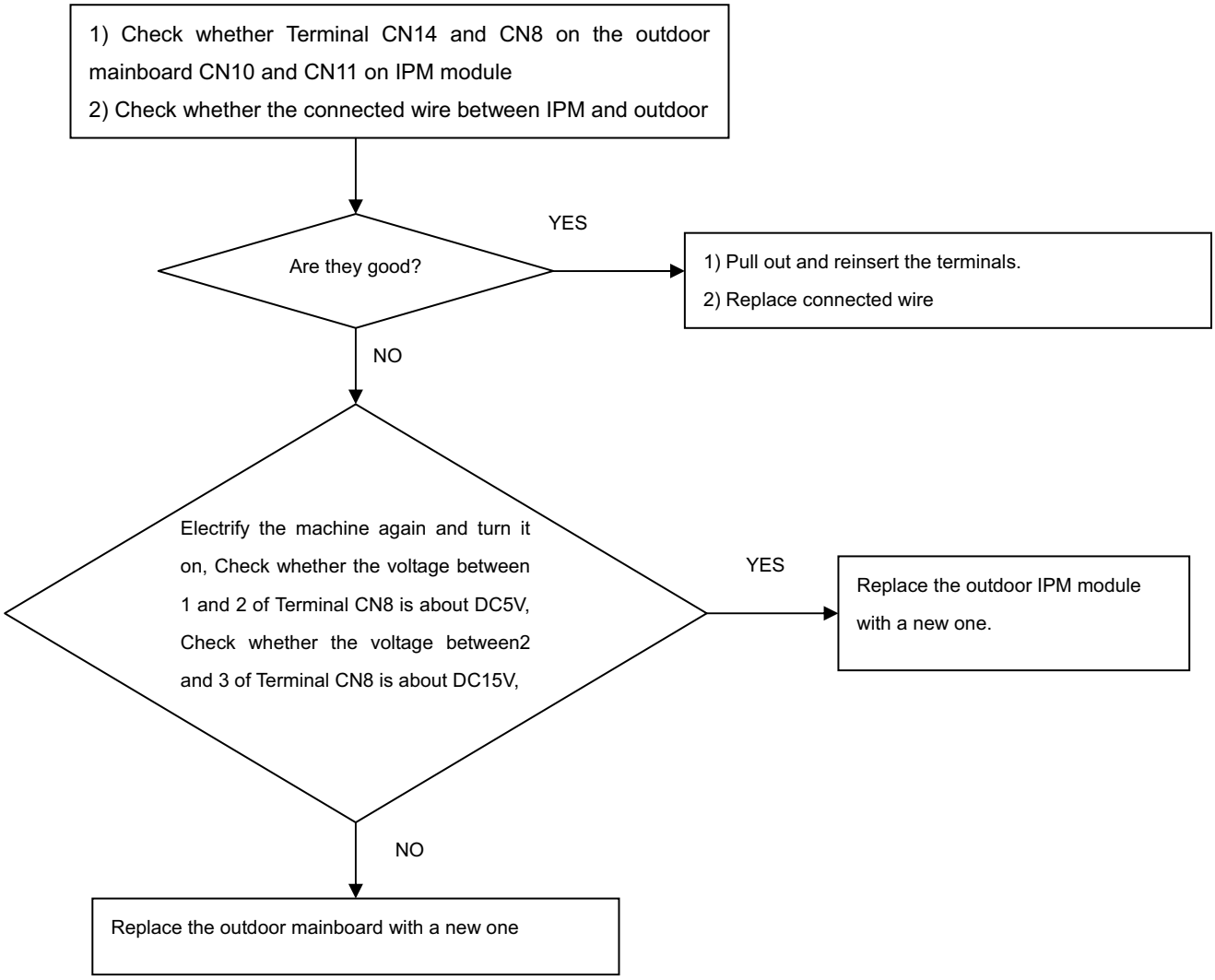

Все каталоги и инструкции здесь: https://splitsystema48.ru/instrukcii-po-ekspluatacii-kondicionerov.html

7.4.5 Thermistor or Related Abnormality(outdoor unit)

Frost-removing temperature sensor failure

Indoor display: **F21**

Exhaust temperature sensor failure

Indoor display: **F25**

Ambient temperature sensor failure

Indoor display: **F6**

Method of Malfunction Detection

This type of error is detected by checking the thermistor input voltage to the microcomputer.
(A thermistor error is detected by checking the temperature)

Malfunction Decision Conditions

The thermistor input is above 4.9V or below 0.1V with the power on.

*** Note:** The values may vary slightly in some models

Supposed Causes

- Faulty connector connection
- Faulty thermistor
- Faulty PCB

Troubleshooting

*** Caution** Be sure to turn off power switch before connect or disconnect connector, or else parts damage may be occurred.

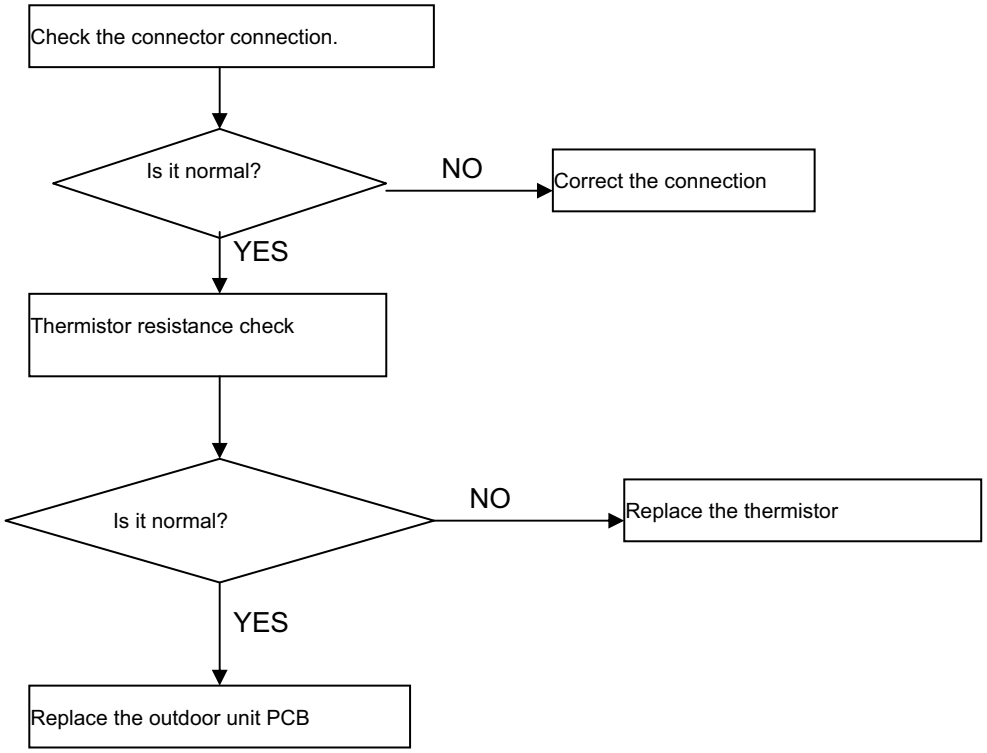

7.4.6 Overheat Protection For Exhaust Temperature

Все каталоги и инструкции здесь: https://splitsystema48.ru/instrukcii-po-ekspluatacii-kondicionerov.html

Indoor display **F4**

Method of Malfunction Detection	the exhaust temperature control is checked with the temperature being detected by the exhaust pipe thermistor
Malfunction Decision Conditions	when the compressor discharge temperature is above 117℃
Supposed Causes	■ Electronic expansion valve defective ■ Faulty thermistor ■ Faulty PCB

Troubleshooting *** Caution** Be sure to turn off power switch before connect or disconnect connector, or else parts damage may be occurred.

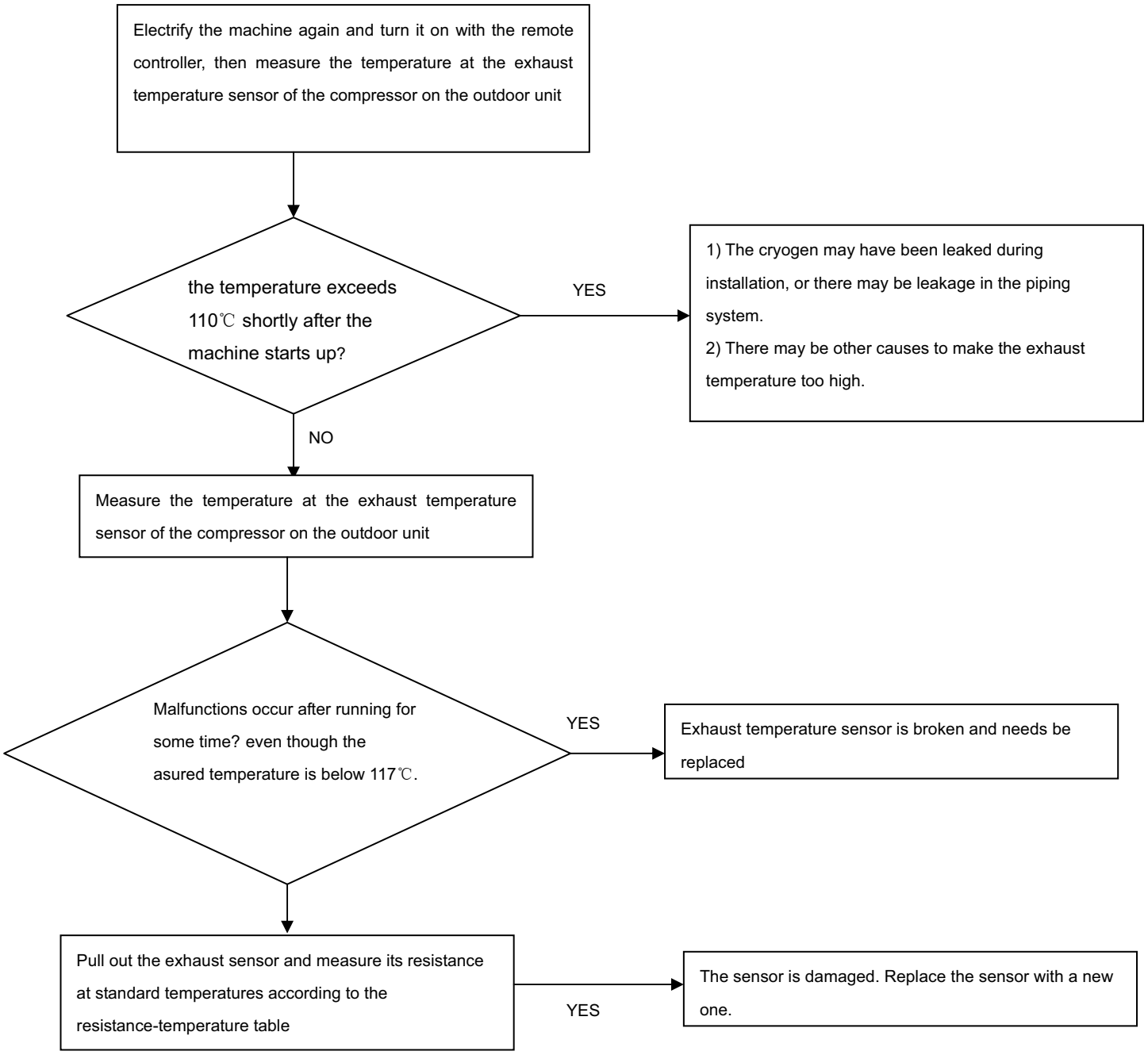

Все каталоги и инструкции здесь: https://splitsystema48.ru/instrukcii-po-ekspluatacii-kondicionerov.html

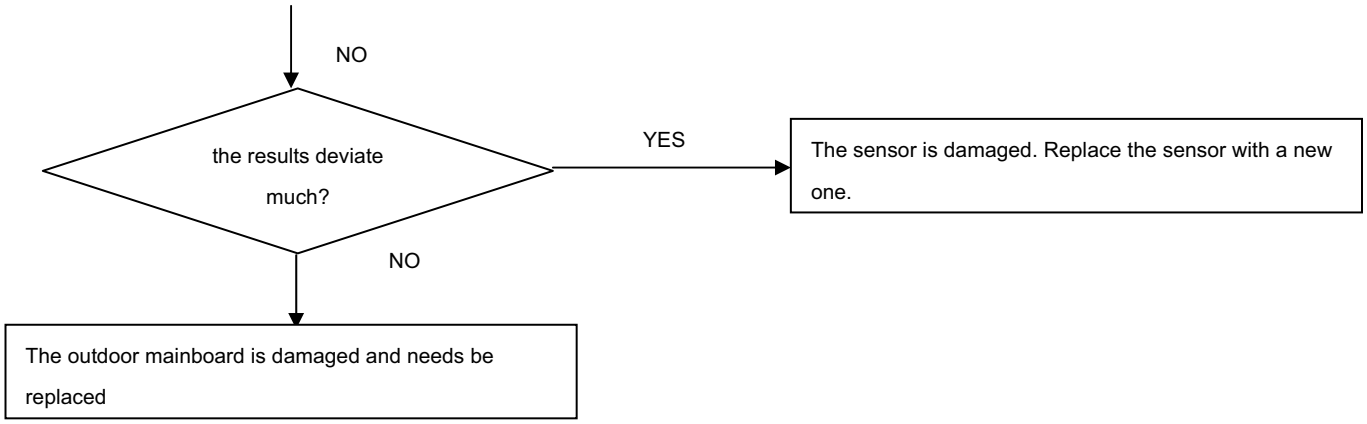

7.4.7 The EEPROM Abnormality (Indoor or outdoor unit)

Indoor Display	**E4**: ： Indoor EEPROM error **F12**：Outdoor EEPROM error
Method of Malfunction Detection	the Data detected by the EEPROM are used to determine MCU
Malfunction Decision Conditions	when the Data of EEPROM is error or the EEPROM is damaged
Supposed Causes	■ Faulty EEPROM data ■ Faulty EEPROM ■Faulty PCB

Troubleshooting *** Caution** Be sure to turn off power switch before connect or disconnect connector, or parts damage may be occurred.

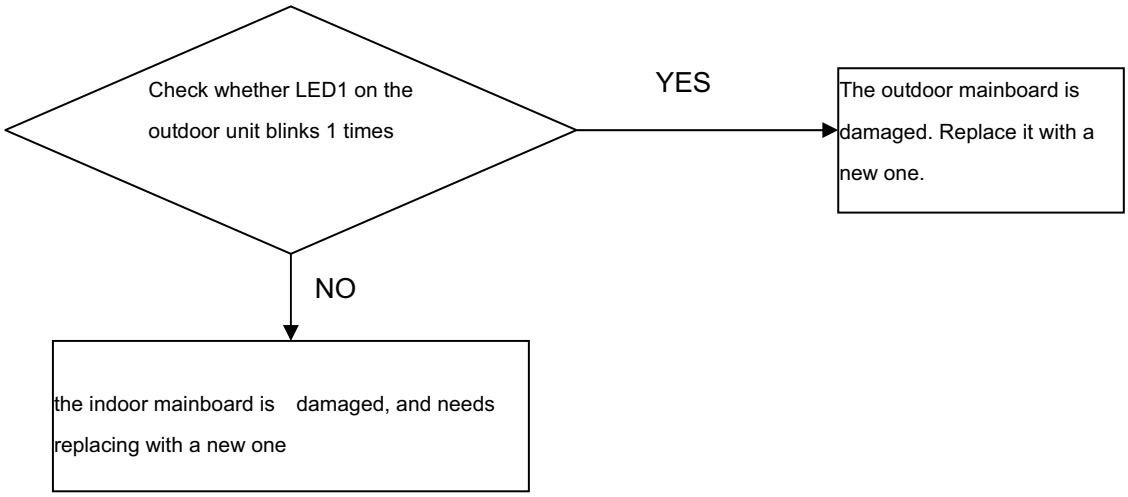

Все каталоги и инструкции здесь: https://splitsystema48.ru/instrukcii-po-ekspluatacii-kondicionerov.html

7.4.8 Communication error between the indoor and outdoor units

Indoor display	**E7**；
Method of Malfunction Detection	The date received from the another unit in indoor unit-outdoor unit signal transmission is checked whether is normal
Malfunction Decision Conditions	When the date sent from the another unit cannot be received normally,or when the content of the data is abnormal
Supposed Causes	■ indoor unit- outdoor unit signal transmission error due to wiring error ■ Faulty PCB

Troubleshooting *** Caution** Be sure to turn off power switch before connect or disconnect connector, or else parts damage may be occurred.

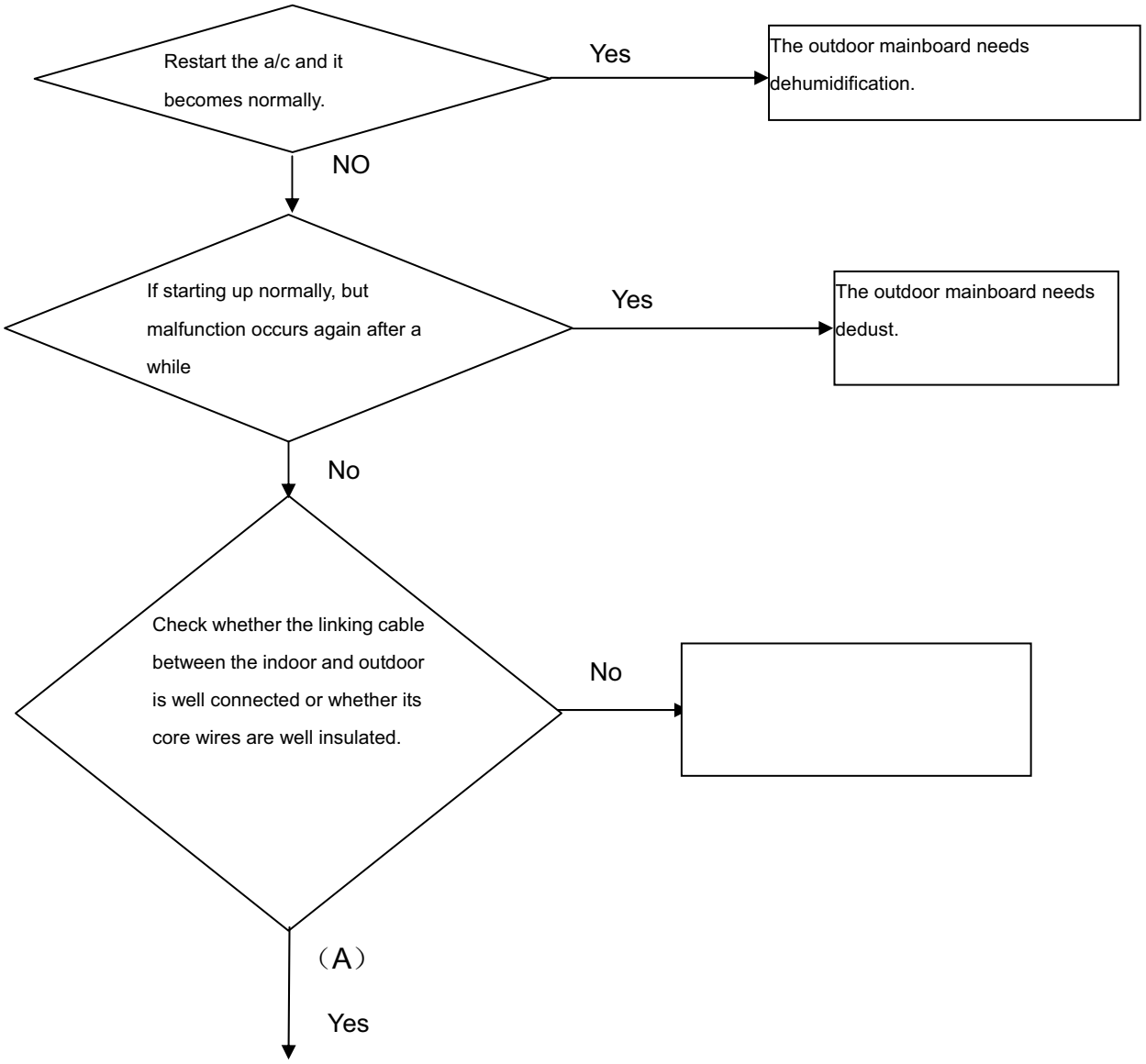

Все каталоги и инструкции здесь: https://splitsystema48.ru/instrukcii-po-ekspluatacii-kondicionerov.html

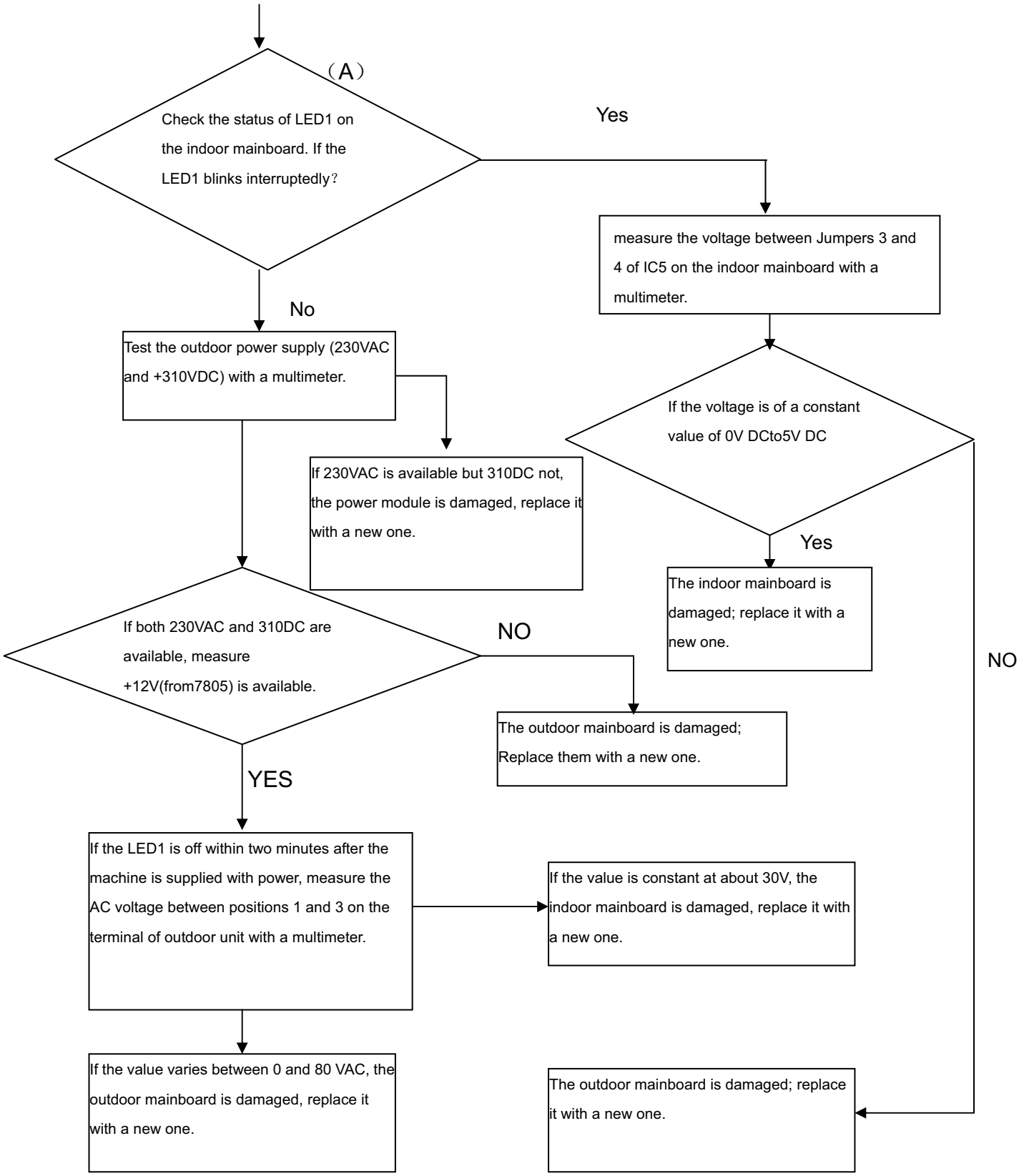

Все каталоги и инструкции здесь: https://splitsystema48.ru/instrukcii-po-ekspluatacii-kondicionerov.html

7.4.9 High work-intense protection

Indoor display	**E9**
Method of sensed Malfunction Detection	High work-intense control is activated in the heating mode if the temperature being by the heat exchanger thermistor exceeds the limit.
Malfunction Decision Conditions	Activated when the temperature being sensed by the heat exchanger thermistor rises above **74**℃ twices in 30 minutes.
Supposed Causes	■ Faulty electronic expansion valve ■ Dirty heat exchanger ■Faulty heat-exchange sensor ■Insufficient gas
Troubleshooting	*** Caution** Be sure to turn off power switch before connect or disconnect connector, or else parts damage may be occurred.

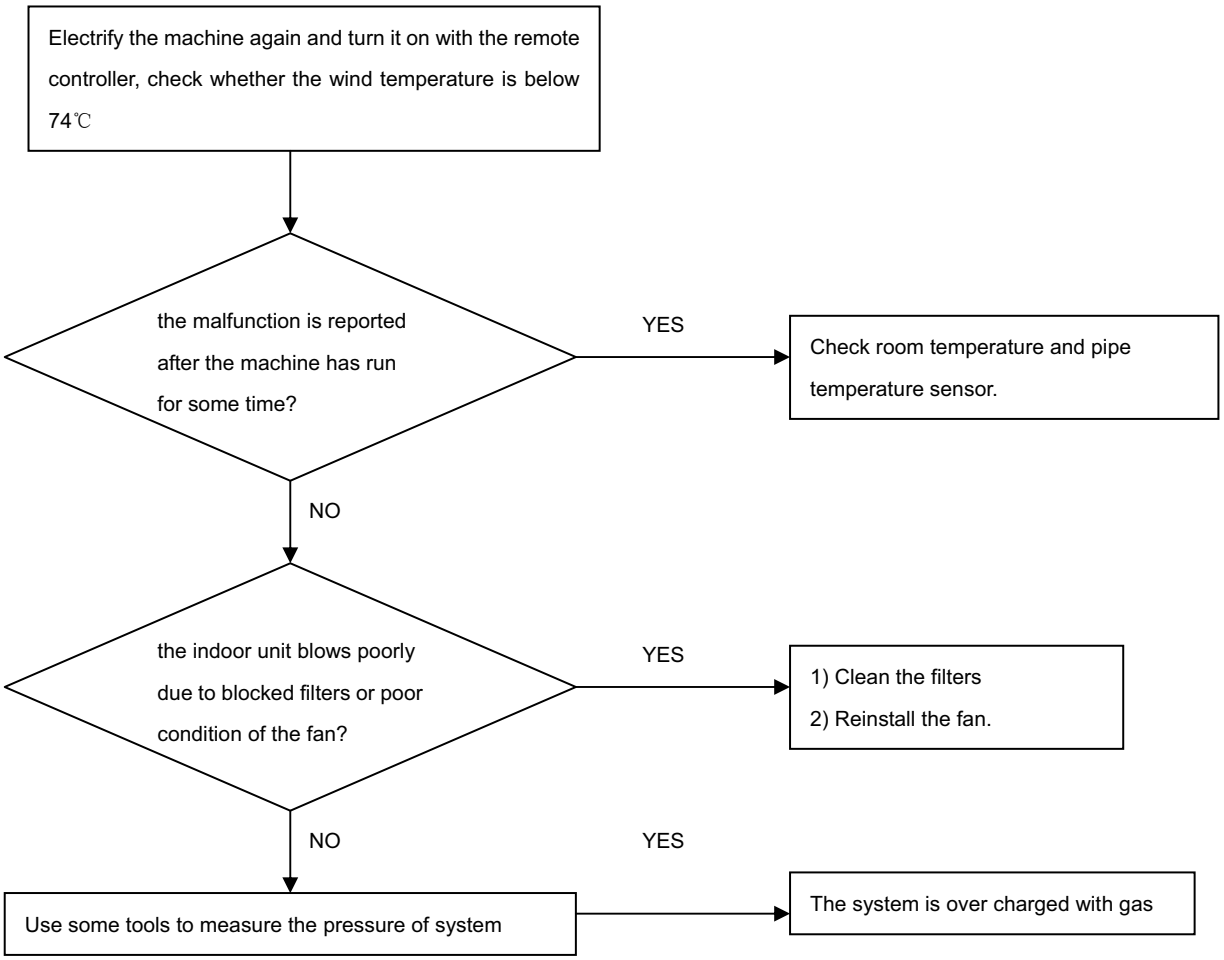

Все каталоги и инструкции здесь: https://splitsystema48.ru/instrukcii-po-ekspluatacii-kondicionerov.html

7.4.10 Power Supply Over or under voltage fault

Indoor display	**F19**
Method of Malfunction Detection	An abnormal voltage rise or fall is detected by checking the specified voltage detection circuit.
Malfunction Decision Conditions	An voltage signal is fed from the voltage detection circuit to the microcomputer
Supposed Causes	■ Supply voltage not as specified ■ the IPM module is broken ■ the outdoor PCB is broken
Troubleshooting	*** Caution** Be sure to turn off power switch before connect or disconnect connector, or else parts damage may be occurred.

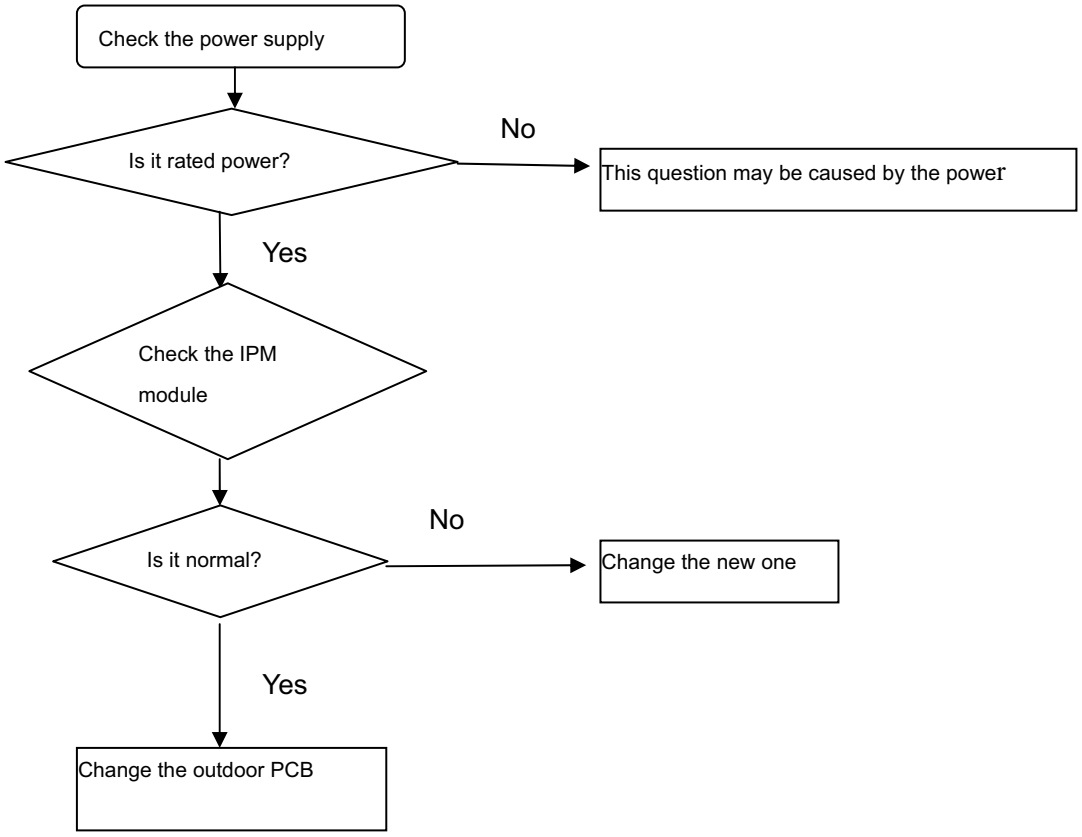

About how to check the IPM module, please refer to IPM protection fault

Все каталоги и инструкции здесь: https://splitsystema48.ru/instrukcii-po-ekspluatacii-kondicionerov.html

7.4.11 Loop of the station detect error

Indoor display	**F19**
Method of Malfunction Detection	the position of the compressor rotor can not detected normally
Malfunction Decision Conditions	when the The wiring of compressor is wrong or the connection is poor; **or** the compressor is damaged
Supposed Causes	■ Faulty The wiring of compressor ■ Faulty compressor ■ Faulty PCB
Troubleshooting	*** Caution** Be sure to turn off power switch before connect or disconnect connector, or parts damage may be occurred.

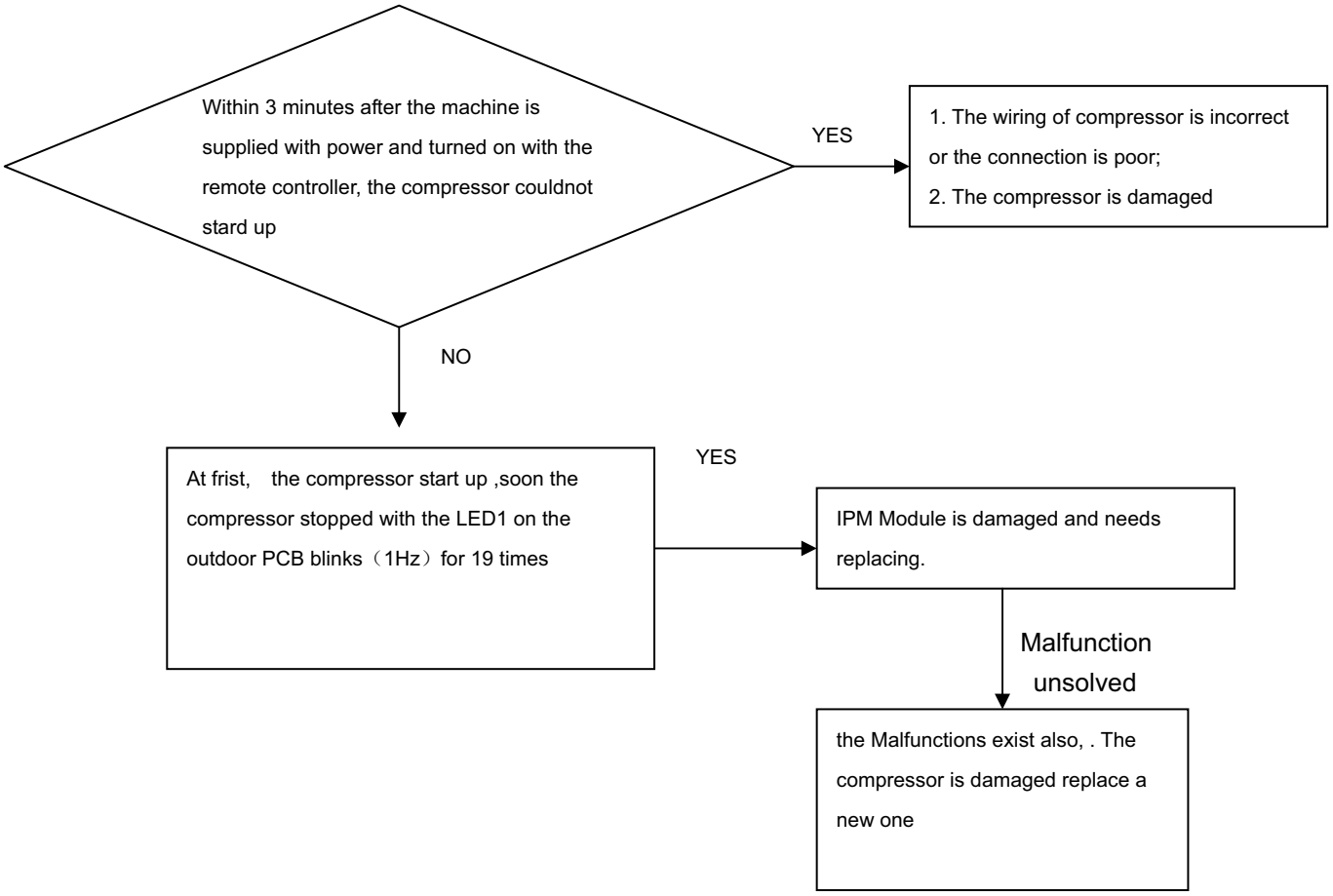

Все каталоги и инструкции здесь: https://splitsystema48.ru/instrukcii-po-ekspluatacii-kondicionerov.html

8. Installation

- Read this manual before installation
- Explain sufficiently the operating means to the user according to this manual.

Necessary Tools for Installation

1.Driver
2.Hacksaw
3.Hole core drill
4.Spanner(17,19 and 26mm)
5.Torque wrench(17mm,22mm,26mm)
6.Pipe cutter
7.Flaring tool
8.Knife
9.Nipper
10.Gas leakage detector or soap-and-water solution
11.Measuring tape
12.Reamer

Drawing for the installation of indoor and outdoor units

Accessory parts

No.	Accessory parts	Number of articles
①	Remote controller	1
②	R-03 dry battery	2
③	Mounting plate	1
④	Drain hose	1
⑤	ϕ4X50 Steel nail, cement	6
⑥	ϕ4X25 Screw / Plastic cap	4
⑦	Drain-elbow	1
⑧	Cover	1
⑨	Cushion	4
⑩	Pipe supporting plate	1
⑪	Connecting cable	1

Note:Cooling only units don't have Drain-elbow

Optional parts for piping

Mark	Parts name
Ⓐ	Non-adhesive tape
Ⓑ	Adhesive tape
Ⓒ	Saddle(L.S) with screws
Ⓓ	Connecting electric cable for indoor and outdoor
Ⓔ	Drain hose
Ⓕ	Heating insulating material
Ⓖ	Piping hole cover

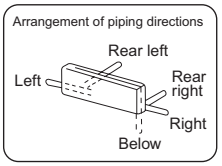

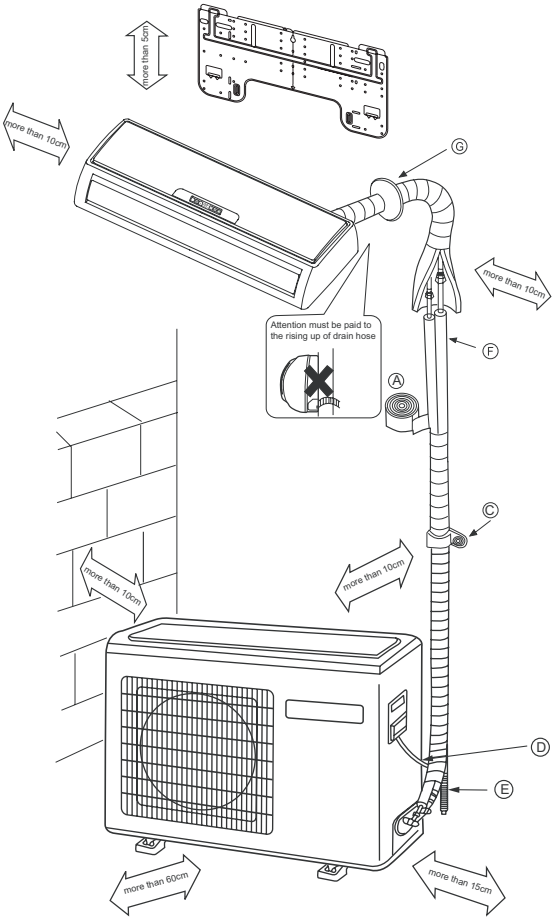

※ The marks from Ⓐ to Ⓖ in the figure are the parts numbers.

※ The distance between the indoor unit and the floor should be more than 2m.

Все каталоги и инструкции здесь: https://splitsystema48.ru/instrukcii-po-ekspluatacii-kondicionerov.html

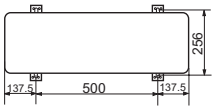

Floor fixing dimensions of the outdoor unit (Unit:mm)

HSU-09HEA03/(BP)
HSU-12HEA03/(BP)

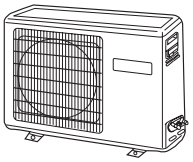

Fixing of outdoor unit

- Fix the unit to concrete or block with bolts(ϕ10mm) and nuts firmly and horizontally.
- When fitting the unit to wall surface, roof or rooftop, fix a supporter surely with nails or wires in consideration of earthquake and strong wind.
- If vibration may affect the house, fix the unit by attaching a vibration-proof mat.

Selection of Installation Place

Indoor Unit

- Place, robust not causing vibration, where the body can be supported sufficiently.
- Place, not affected by heat or steam generated in the vicinity, where inlet and outlet of the unit are not disturbed.
- Place, possible to drain easily, where piping can be connected with the outdoor unit.
- Place, where cold air can be spread in a room entirely.
- Place, nearby a power receptacle, with enough space around. (Refer to drawings).
- Place where the distance of more than lm from televisions, radios, wireless apparatuses and fluorescent lamps can be left.
- In the case of fixing the remote controller on a wall, place where the indoor unit can receive signals when the fluorescent lamps in the room are lightened.

Outdoor Unit

- Place, which is less affected by rain or direct sunlight and is sufficiently ventilated.
- Place, possible to bear the unit, where vibration and noise are not increased.
- Place, where discharged wind and noise do not cause a nuisance to the neighbors.
- Place, where a distance marked ⇔ is available as illustrated in the above figure.

Power Source

- Before inserting power plug into receptacle, check the voltage without fail. The power source is the same as the corresponding name plate.
- Install an exclusive branch circuit of the power.
- A receptacle shall be set up in a distance where the power cable can be reached. Do not extend the cable by cutting it.

Selection of pipe

- To this unit, both liquid and gas pipes shall be insulated as they become low temperature in operation.
- Use optional parts for piping set or pipes covered with equivalent insulation material.

	For 09	For 12
Liquid pipe (ϕ)	6.35mm(1/4")	6.35mm(1/4")
Gas pipe (ϕ)	9.52mm(3/8")	12.7mm(1/2")

Все каталоги и инструкции здесь: https://splitsystema48.ru/instrukcii-po-ekspluatacii-kondicionerov.html

Indoor unit

Indoor unit

1.Fitting of the Mounting Plate and Positioning of the wall Hole

When the mounting plate is first fixed

1.Carry out, based on the neighboring pillars or lintels, a proper leveling for the plate to be fixed against the wall, then temporarily fasten the plate with one steel nail.
2. Make sure once more the proper level of the plate, by hanging a thread with a weight from the central top of the plate, then fasten securely the plate with the attachment steel nail.
3. Find the wall hole location A using a measuring tape

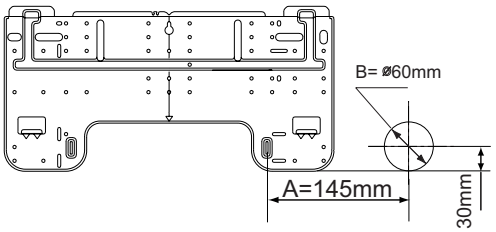

When the mounting plate is fixed side bar and lintel

- Fix to side bar and lintel a mounting bar, Which is separately sold, and then fasten the plate to the fixed mounting bar.
- Refer to the previous article, " When the mounting plate is first fixed ", for the position of wall hole.

2.Making a Hole on the Wall and Fitting the Piping Hole Cover

- Make a hole of 60 mm in diameter, slightly descending to outside the wall.
- Install piping hole cover and seal it off with putty after installation

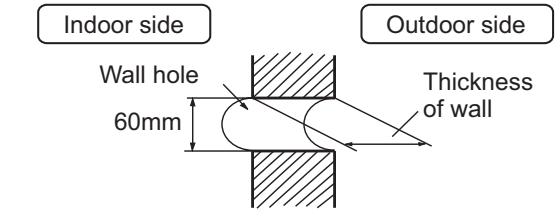

(Section of wall hole) Ⓖ Piping hole pipe

3.Installation of the Indoor Unit

Drawing of pipe

[Rear piping]

- Draw pipes and the drain hose, then fasten them with the adhesive tape

[Left • Left-rear piping]

- In case of left side piping, cut away, with a nipper, the lid for left piping.
- In case of left-rear piping, bend the pipes according to the piping direction to the mark of hole for left-rear piping which is marked on heat insulation materials.

Все каталоги и инструкции здесь: https://splitsystema48.ru/instrukcii-po-ekspluatacii-kondicionerov.html

Indoor unit

1. Insert the drain hose into the dent of heat insulation materials of indoor unit.
2. Insert the indoor/outdoor electric cable from backside of indoor unit, and pull it out on the front side, then connect them.
3. Coat the flaring seal face with refrigerant oil and connect pipes.
   Cover the connection part with heat insulation materials closely, and make sure fixing with adhesive tape

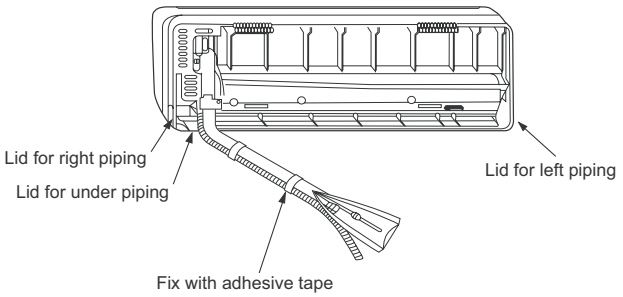

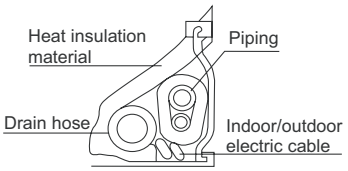

- Indoor/outdoor electric cable and drain hose must be bound with refrigerant piping by protecting tape.

[Other direction piping]

- Cut away, with a nipper, the lid for piping according to the piping direction and then bend the pipe according to the position of wall hole. When bending, be careful not to crash pipes.

- Connect beforehand the indoor/outdoor electric cable, and then pull out the connected to the heat insulation of connecting part specially.

Fixing the indoor unit body

- Hang surely the unit body onto the upper notches of the mounting plate. Move the body from side to side to verify its secure fixing.
- In order to fix the body onto the mounting plate,hold up the body aslant from the underside and then put it down perpendicularly.

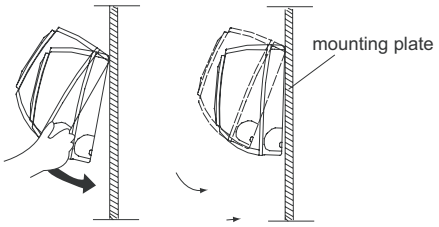

Unloading of indoor unit body

- When you unload the indoor unit,please use your hand to arise the body to leave agraffe,then lift the bottom of the body outward slightly and lift the unit aslant until it leaves the mounting plate.

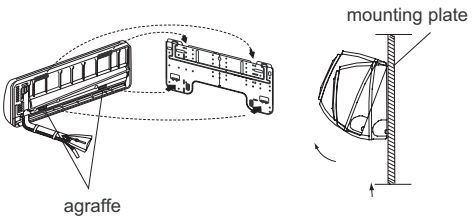

Все каталоги и инструкции здесь: https://splitsystema48.ru/instrukcii-po-ekspluatacii-kondicionerov.html

Indoor unit

Indoor unit

1.Fitting of the Mounting Plate and Positioning of the wall Hole

When the mounting plate is first fixed

1.Carry out, based on the neighboring pillars or lintels, a proper leveling for the plate to be fixed against the wall, then temporarily fasten the plate with one steel nail.
2. Make sure once more the proper level of the plate, by hanging a thread with a weight from the central top of the plate, then fasten securely the plate with the attachment steel nail.
3. Find the wall hole location A using a measuring tape

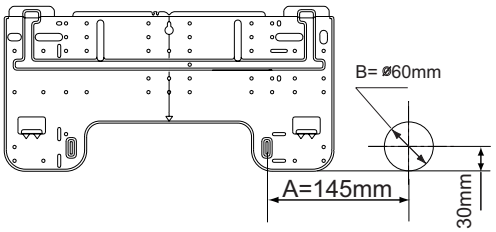

When the mounting plate is fixed side bar and lintel

- Fix to side bar and lintel a mounting bar, Which is separately sold, and then fasten the plate to the fixed mounting bar.
- Refer to the previous article, " When the mounting plate is first fixed ", for the position of wall hole.

2.Making a Hole on the Wall and Fitting the Piping Hole Cover

- Make a hole of 60 mm in diameter, slightly descending to outside the wall.
- Install piping hole cover and seal it off with putty after installation

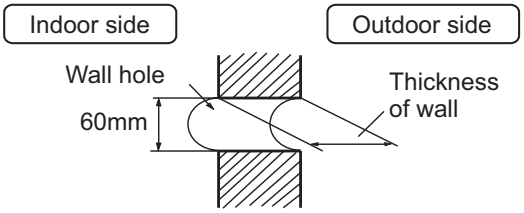

(Section of wall hole) Ⓖ Piping hole pipe

3.Installation of the Indoor Unit

Drawing of pipe

[Rear piping]

- Draw pipes and the drain hose, then fasten them with the adhesive tape

[Left • Left-rear piping]

- In case of left side piping, cut away, with a nipper, the lid for left piping.
- In case of left-rear piping, bend the pipes according to the piping direction to the mark of hole for left-rear piping which is marked on heat insulation materials.

Все каталоги и инструкции здесь: https://splitsystema48.ru/instrukcii-po-ekspluatacii-kondicionerov.html

Outdoor unit

Outdoor unit

1.Installation of Outdoor Unit

Install according to Drawing for the installation of indoor and outdoor units

2.Connection of pipes

- To bend a pipe, give the roundness as large as possible not to crush the pipe
- Connecting the pipe of gas side first makes working easier.
- The max vertical distance between the indoor unit and the outdoor unit is 5 m.

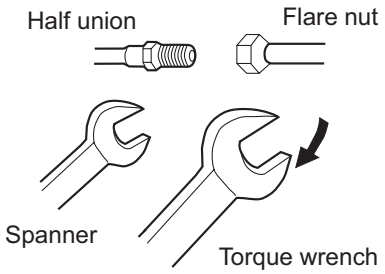

Forced fastening without careful centering may damage the threads and cause a leakage of gas.

Pipe Diameter (∅)	Fastening torque
Liquid side 6.35mm(1/4")	18N.m
Liquid side 9.52mm(3/8")	40N.m
Gas side 9.52mm(3/8")	42N.m
Gas side 12.7mm(1/2")	50N.m

Be careful that matters, such as wastes of sands, etc. shall not enter the pipe.

3.Connection

- Use the same method on indoor unit. Loosen the screws on terminal block and insert the plugs fully into terminal block, then tighten the screws.
- Insert the cable according to terminal number in the same manner as the indoor unit.
- If wiring is not correct, proper operation can not be carried out and controller may be damaged.
- Fix the cable with a clamp.

4.Attaching Drain-Elbow

- If the drain-elbow is used, please attach it as figure. (Note: Only for heat pump unit.)

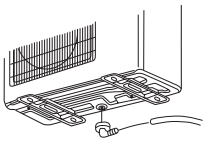

Все каталоги и инструкции здесь: https://splitsystema48.ru/instrukcii-po-ekspluatacii-kondicionerov.html

Outdoor unit

5.Purging Method:

Push the air out of the indoor unit and piping as followes:

(1) Remove the valve cap on 2-way valve in outdoor unit.

(2) Loosen by 1/2 turn the flare nut of gas pipe, which is conneted to 3-way valve.

(3) Loosen 2-way valve by 90° using hexagon wrench, and after approx. 10 sec tighten it up. Gas comes out through flare nut on wide pipe. If no gas is discharged, tighten flare nut with specified torque.

(4) Open 2-way and 3-way valves using specified torque.

(5) Tighten the caps on the valves with specified torque.

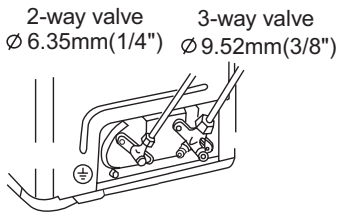

HSU-09HEA03/(BP)

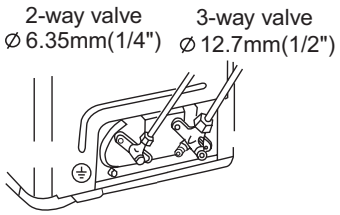

HSU-12HEA03/(BP)

	Tighten torque N.m
Valve rod	7-9
Valve cap	20-25

- When connecting pipe exceeds 5 meters, 20g or 60g(only for 24k) refrigerant shall be added per exceeding meter. Charge according to the following list.

	for 9k 12k		
Piping length	5m	7m	10m
Additional amount	No need	40g	100g

- Note: When extending piping, air inside piping shall be removed by using external refrigerant gas, charge according to the following list.

Все каталоги и инструкции здесь: https://splitsystema48.ru/instrukcii-po-ekspluatacii-kondicionerov.html

1.Power Source Installation

- The power source must be exclusively used for air conditioner. (Over I0A)
- In the case of installing an air conditioner in a moist place, please install an earth leakage breaker.
- For installation in other places, use a circuit breaker as far as possible.

2.Cutting and Flaring Work of Piping

- Pipe cutting is carried out with a pipe cutter and burs must be removed.
- After inserting the flare nut, flaring work is carried out.

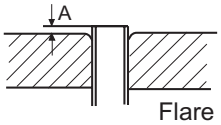

Flare tooling die

	Pipe diameter(ϕ)	Size A(mm)
Liquid side	6.35mm(1/4")	0.8~1.5
Liquid side	9.52mm(3/8")	1.0~1.8
Gas side	9.52mm(3/8")	1.0~1.8
Gas side	12.7mm(1/2")	1.2~2.0

Correct	Incorrect				
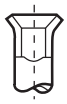				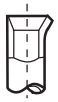	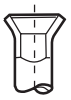
	Lean	Damage of flare	Crack	Partial	Too outside

3.On Drainage

Please install the drain hose so as to be downward slope without fail.
Please don't do the drainage as shown below.

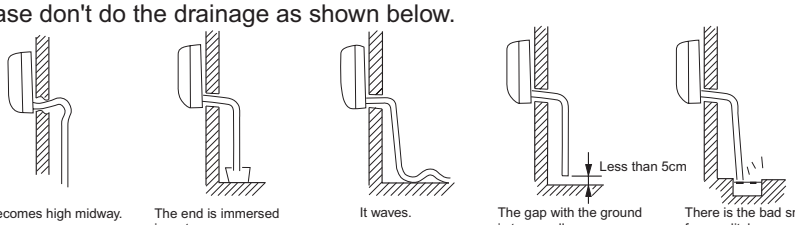

It becomes high midway. | The end is immersed in water. | It waves. | The gap with the ground is too small | There is the bad smell from a ditch

- Please pour water in the drain pan of the indoor unit, and confirm that drainage is carried out surely to outdoor.
- In case that the attached drain hose is in a room, please apply heat insulation to it without fail.

Check for Installation and Test Run

- Please kindly explain to our customers how to operate through the instruction manual.

Check Items for Test Run

☐ Put check mark ✓ in boxes

☐ Gas leak from pipe connecting?
☐ Heat insulation of pipe connecting?
☐ Are the connecting wirings of indoor and outdoor firmly inserted to the terminal block?
☐ Is the connecting wiring of indoor and outdoor firmly fixed?
☐ Is drainage securely carried out?
☐ Is the earth line securely connected?
☐ Is the indoor unit securely fixed?
☐ Is power source voltage abided by the code?
☐ Is there any noise?
☐ Is the lamp normally lighting?
☐ Are cooling and heating (when in heat pump) performed normally?
☐ Is the operation of room temperature regulator normal?

Все каталоги и инструкции здесь: https://splitsystema48.ru/instrukcii-po-ekspluatacii-kondicionerov.html

9. Removal Procedure

Indoor unit

9.1 Removal of Air Filter

Procedure

Warning Be sure to wait 10 minutes or more after turning off all power supplies before disassembling work.

Step	Procedure		Points
1. Features		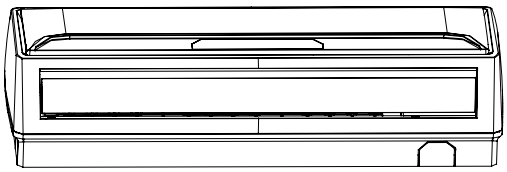	
2. Remove the air filters.			
1	Hold the front panel by the tabs on the both sides and lift it until it stops with a click.	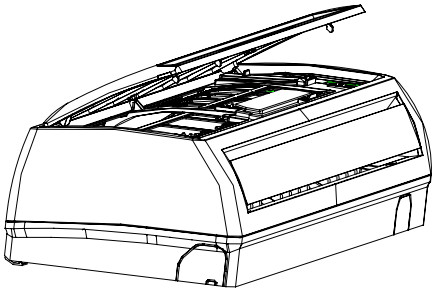	

Все каталоги и инструкции здесь: https://splitsystema48.ru/instrukcii-po-ekspluatacii-kondicionerov.html

9.2 Removal of Front Grille

Procedure

⚠ Warning Be sure to wait 10 minutes or more after turning off all power supplies before disassembling work.

Step		Procedure	Points
1. Remove the front panel.			
1	Open the front panel to the horizontal position. Release the both sides pivots and remove the front panel.	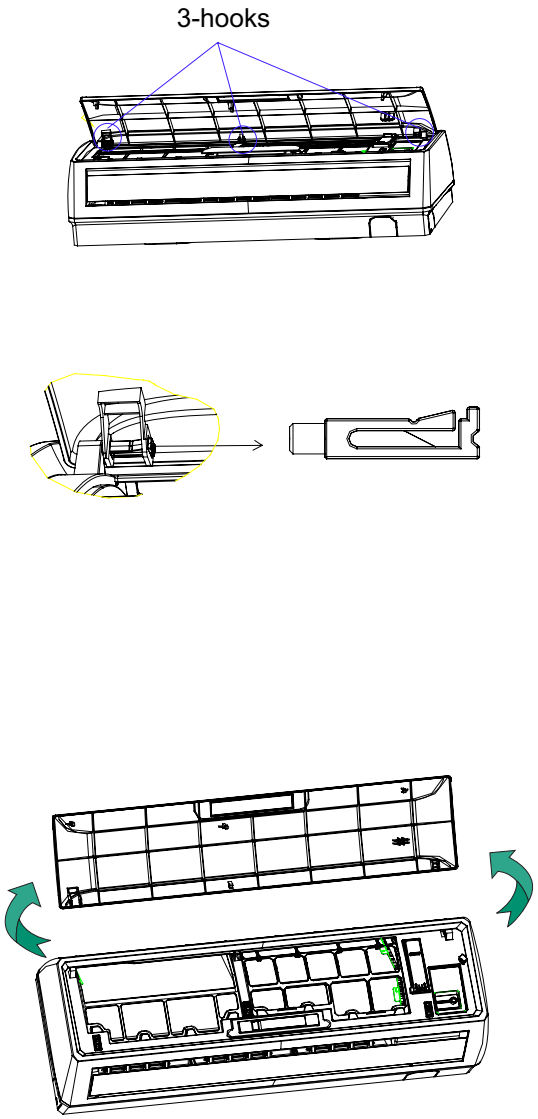	■ Start the removal procedure of front grille when the panels are closed. ■ Slide the front panel side to side to release each axis. ■ When assembling, align the right and left axes with grooves in turn and insert them to the end.

Все каталоги и инструкции здесь: https://splitsystema48.ru/instrukcii-po-ekspluatacii-kondicionerov.html

9.3 Removal of Horizontal Blade

Procedure

⚠ Warning Be sure to wait 10 minutes or more after turning off all power supplies before disassembling work.

Step		Procedure	Points
1. Remove the horizontal blade.			■ The horizontal blade is single.
1	Release the center pivot.	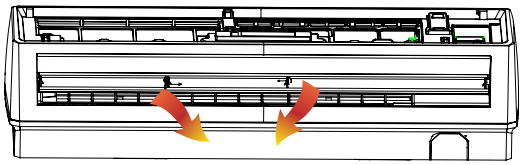 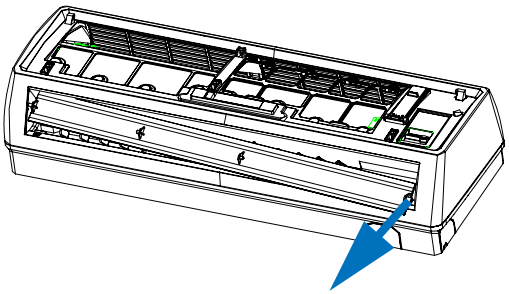	■ Installation procedure 1. Since key pattern hook is provided, rotate the blade and fit it to the left pivot first. 2. Fit the blade to the right pivot. 3. Fit the blade to the center pivot.
2	Bend the horizontal blade slightly and remove it.	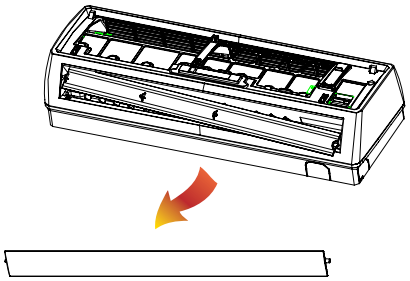	

Все каталоги и инструкции здесь: https://splitsystema48.ru/instrukcii-po-ekspluatacii-kondicionerov.html

Step	Procedure		Points
	Pull the two bolt dowels and Loosen the marked two screws	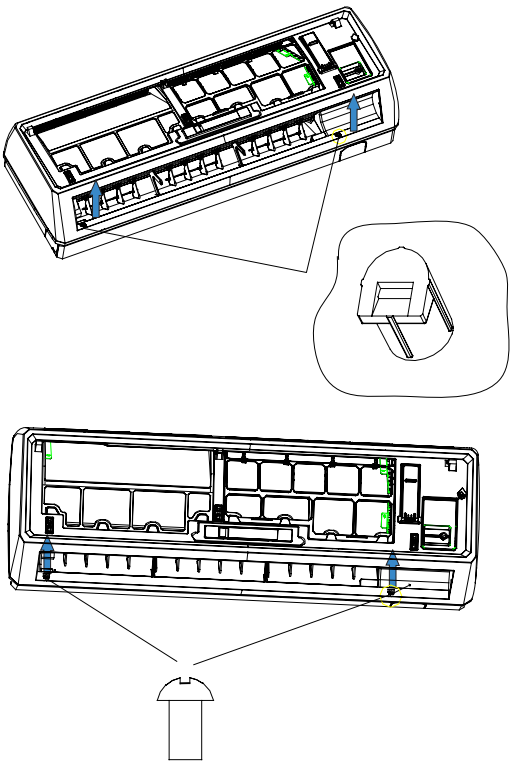	
	Pull the air filters and removel them	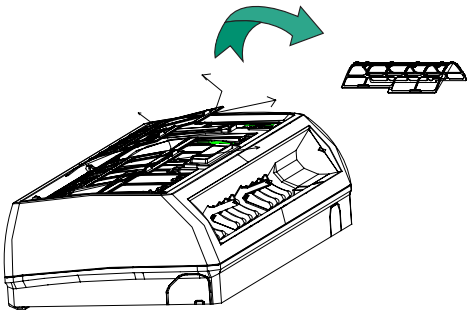	■ When assembling, install the front grille horizontally so as not to stuff the flap inside. ■ When assembling, make sure the three hooks are caught properly.

Все каталоги и инструкции здесь: https://splitsystema48.ru/instrukcii-po-ekspluatacii-kondicionerov.html

Step	Procedure		Points
	Release the marked three hooks.	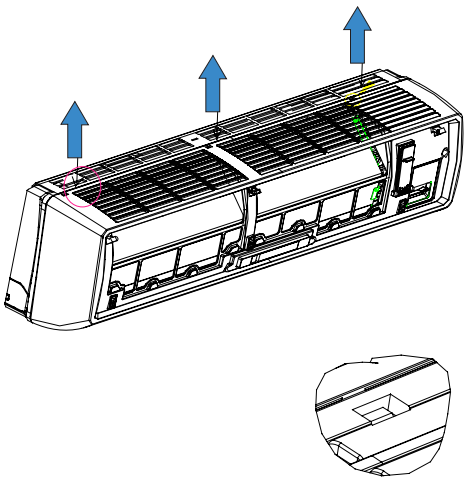	
	Pull the front grille out horizontally and remove it.	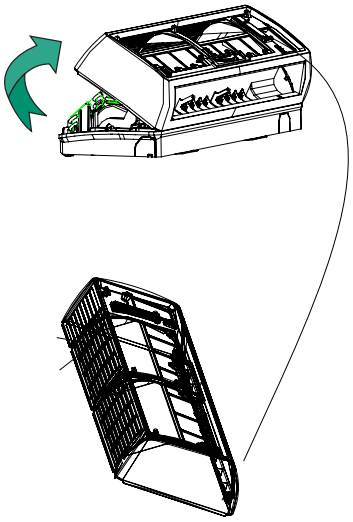	■ When assembling, install the front grille horizontally so as not to stuff the flap inside. ■ When assembling, make sure the three hooks are caught properly.

Все каталоги и инструкции здесь: https://splitsystema48.ru/instrukcii-po-ekspluatacii-kondicionerov.html

9.4 Removal of Drain pan

Procedure

Warning Be sure to wait 10 minutes or more after turning off all power supplies before disassembling work.

Step	Procedure		Points
1. Remove the Drain pan			
1	Loosen the marked screws	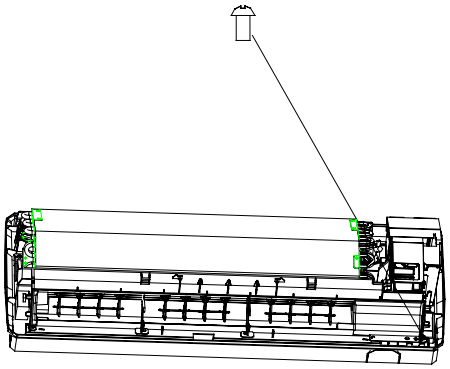	
2	Pull the two chips out from the frame	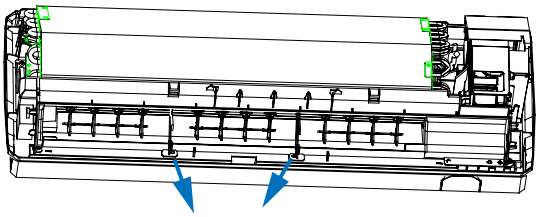	
3	Pull out the drain pan	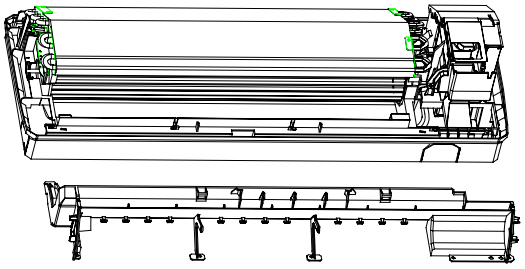	

Все каталоги и инструкции здесь: https://splitsystema48.ru/instrukcii-po-ekspluatacii-kondicionerov.html

9.5 Removal of Vertical Blades and Swing Motor

Procedure

⚠ Warning Be sure to wait 10 minutes or more after turning off all power supplies before disassembling work.

Step	Procedure	Points
■ Remove the assembly of the outlet grille.		
1. Remove the vertical blades.		
1	Push the hooks on the back of the vertical blades and remove.	

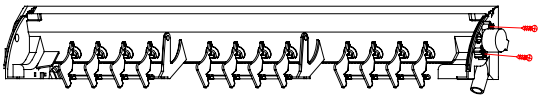

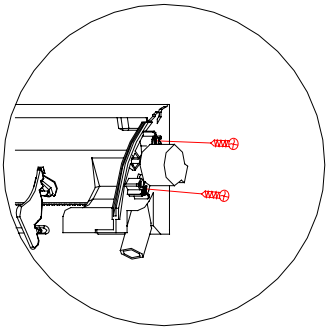

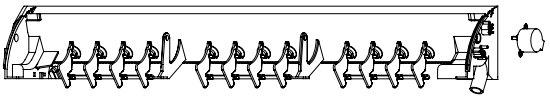

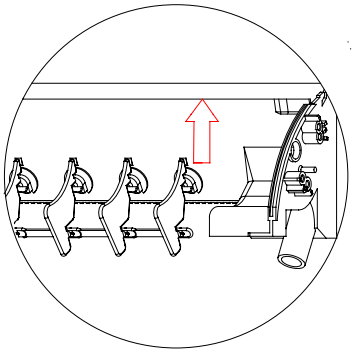

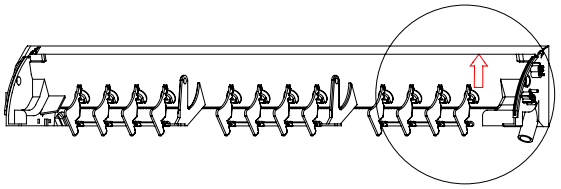

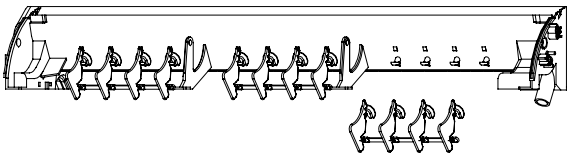

Все каталоги и инструкции здесь: https://splitsystema48.ru/instrukcii-po-ekspluatacii-kondicionerov.html

9.6 Removal of Electrical Box

Procedure

Warning Be sure to wait 10 minutes or more after turning off all power supplies before disassembling work.

Step	Procedure		Points
■ Remove the front grille.			■ Discharge the static electricity from your body before touching the electrical parts like signal receiver PCB. It may cause malfunction of PCB.
1. Remove the electrical box.			
1	Loosen the screw marked and pull the electrical control box cover out	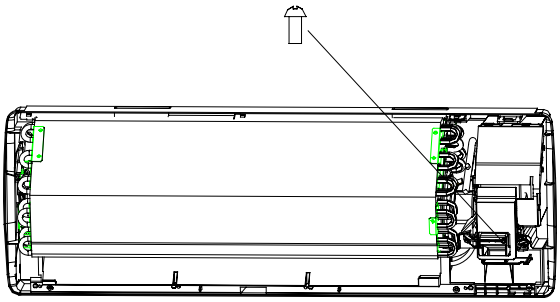	
2	Loosen the two marked screw and then loosen the hooks marked the concrol box can be pulled out	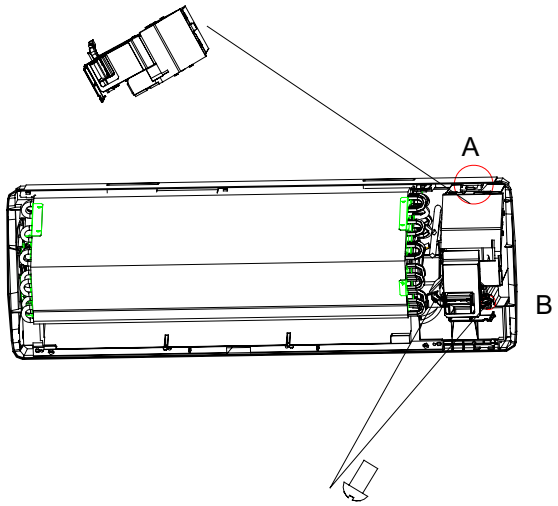 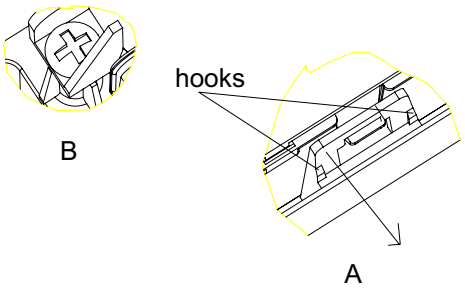	■ When assembling, insert the left hook of the drip proof plate into the hem plate of the heat exchanger.

Все каталоги и инструкции здесь: https://splitsystema48.ru/instrukcii-po-ekspluatacii-kondicionerov.html

9.7 Removal of Heat Exchanger

Procedure ⚠ Warning Be sure to wait 10 minutes or more after turning off all power supplies before disassembling work.

Step	Procedure		Points
			■ You can detach the indoor unit without removing the assembly of the outlet grille.
1	Loosen the screws fixed to the installation plate.	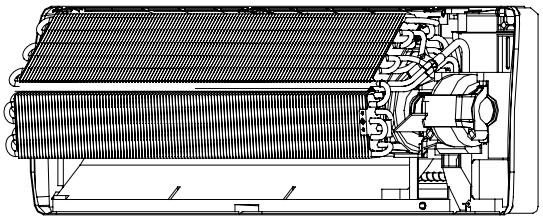	⚠ Caution If gas leaks, repair the spot of leaking, then collect all refrigerant from the unit. After conducting vacuum drying, recharge proper amount of refrigerant.
2	Loosen the marked hooks	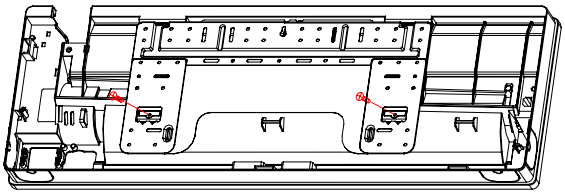	⚠ Caution Do not contaminate any gas (including air) other than the specified refrigerant (R410A), into refrigerant cycle. (Contaminating of air or other gas causes abnormal high pressure in refrigerating cycle, and this results in pipe breakage or personal injuries.)
3	Loosen the marked screws and remove mounting plate	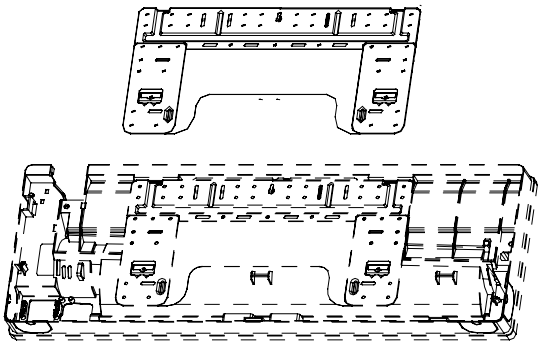	■ Pay attention so that the residual water in the drain will not make the floor wet. ■ In case that a drain hose is buried inside a wall, remove it after the drain hose in the wall is pulled out. ■ Use two wrenches to disconnect pipes. ■ When disconnecting pipes, cover every nozzle with caps so as not to let dust and moisture in.

Все каталоги и инструкции здесь: https://splitsystema48.ru/instrukcii-po-ekspluatacii-kondicionerov.html

Step	Procedure	Points
1	Release the hooks	
2	Release the hook from the back side. Lift up the lower part of the fixture plate and remove it.	
6	Remove the heat exchanger	

Все каталоги и инструкции здесь: https://splitsystema48.ru/instrukcii-po-ekspluatacii-kondicionerov.html

9.8 Removal of Fan Rotor and Fan Motor

Procedure

⚠ Warning Be sure to wait 10 minutes or more after turning off all power supplies before disassembling work.

Step	Procedure	Points
1. Remove the right side plate.		
1	Loosen the 2 screws. 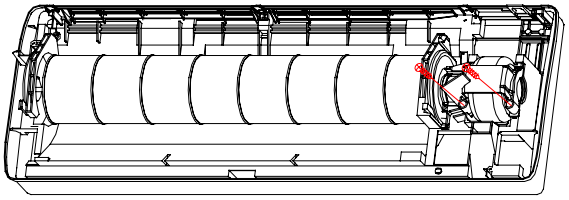	
2	Remove the fixing plate. 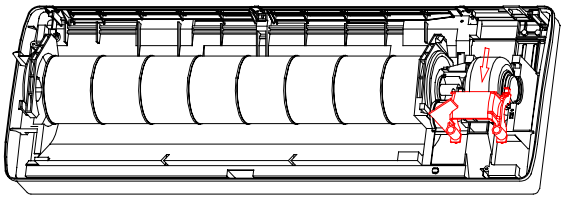 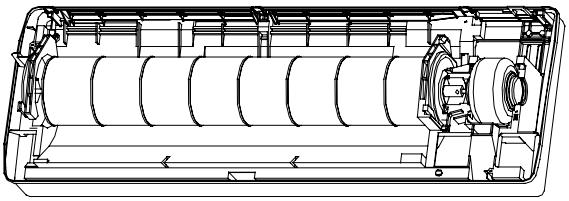 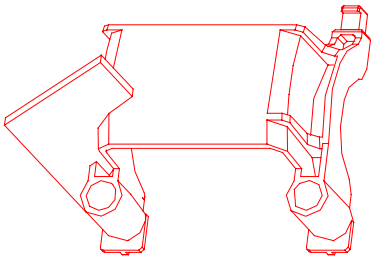	

Все каталоги и инструкции здесь: https://splitsystema48.ru/instrukcii-po-ekspluatacii-kondicionerov.html

Step	Procedure	Points
3. Remove the fan.		
1	Loosen the marked screw. 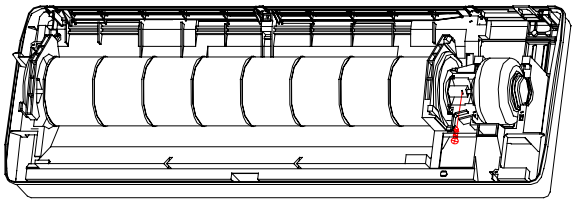	
2	Lift up the right part of the fan motor and slide it to the rightward to remove. 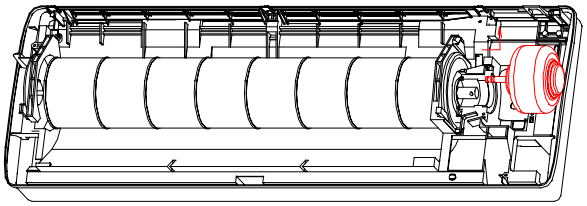	
3	Lift up the right part of the fan and remove it 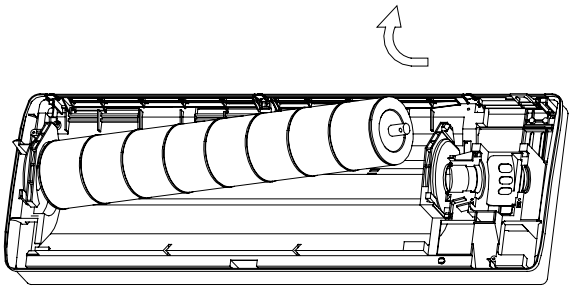 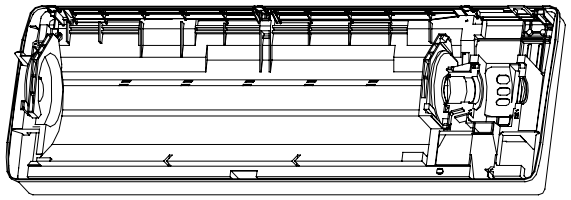	

Все каталоги и инструкции здесь: https://splitsystema48.ru/instrukcii-po-ekspluatacii-kondicionerov.html

Outdoor unit

9.9 Removal of Outdoor panel

Procedure

Warning Be sure to wait 10 minutes or more after turning off all power supplies before disassembling work.

Step	Procedure		Points
1. Features			
1	Loosen the screw of the stop valve cover. Pull down the stop valve cover and remove it.	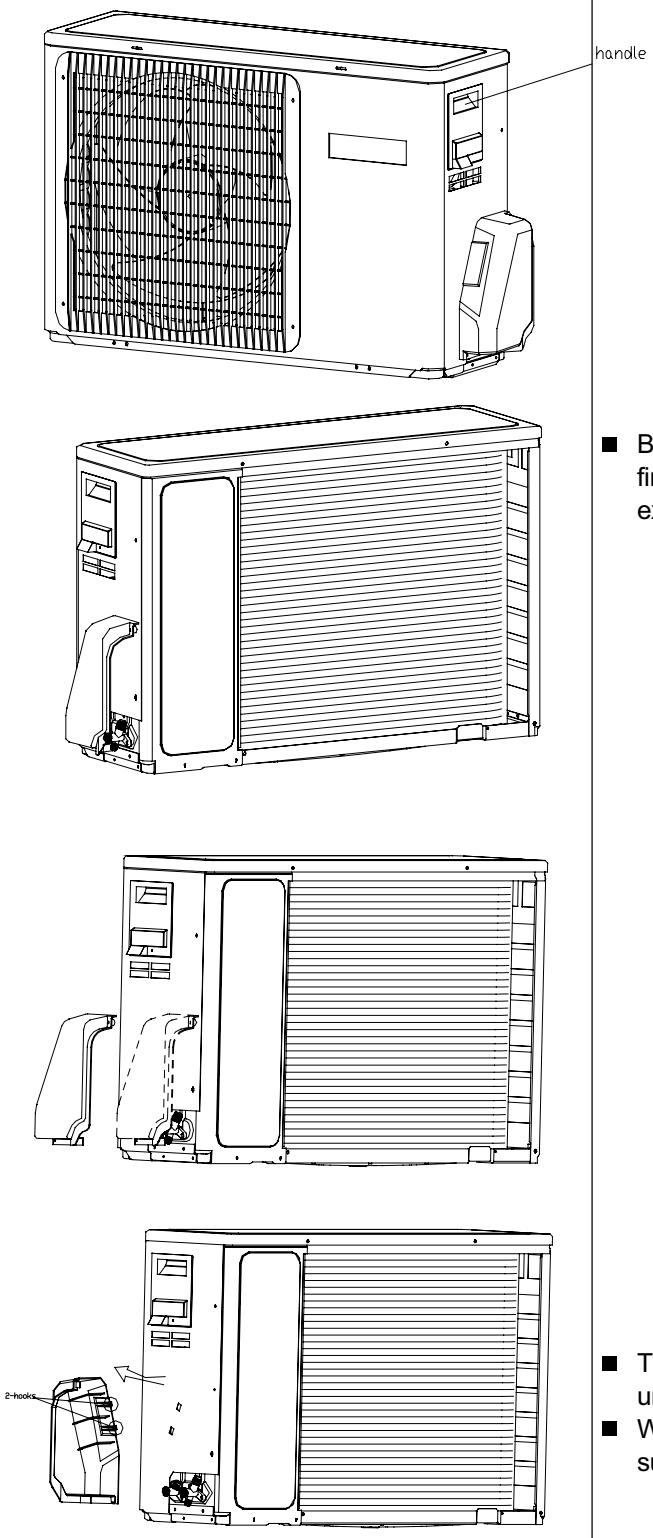	■ Be careful not to cut your finger by the fins of the heat exchanger. ■ The stop valve cover is united with the shelter. ■ When assembling, make sure to fit the 5 hooks.

Все каталоги и инструкции здесь: https://splitsystema48.ru/instrukcii-po-ekspluatacii-kondicionerov.html

Step	Procedure	Points
2. Remove the panels.		
1	Loosen the 4 screws and lift the top panel 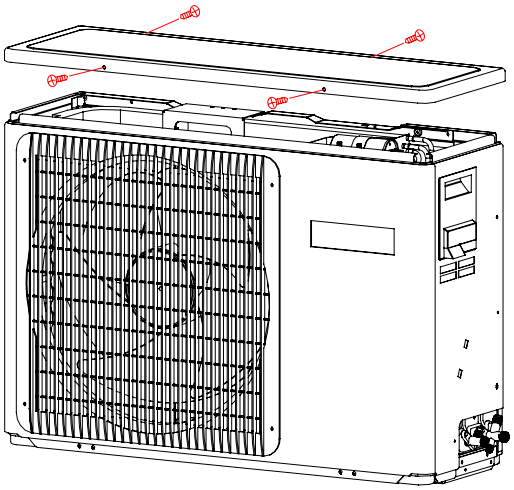	
2	Loosen the service cover screw and remove the service cover. 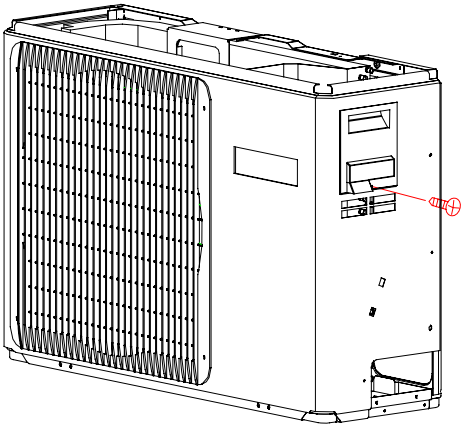 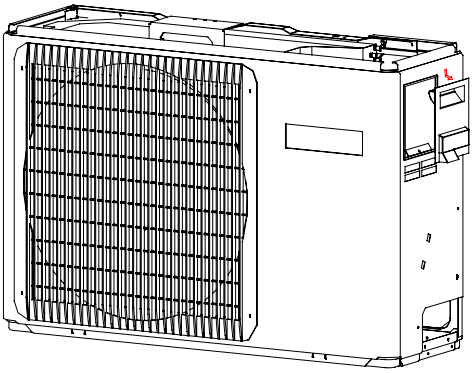	

Haier Все каталоги и инструкции здесь: https://splitsystema48.ru/instrukcii-po-ekspluatacii-kondicionerov.html estic Air Conditioner

Step	Procedure	Points
3	Loosen the screws of the panel. 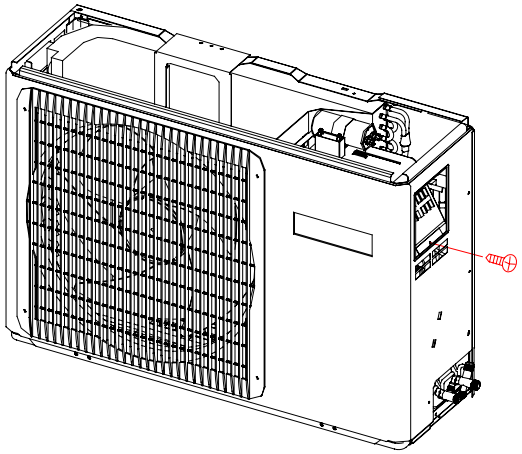 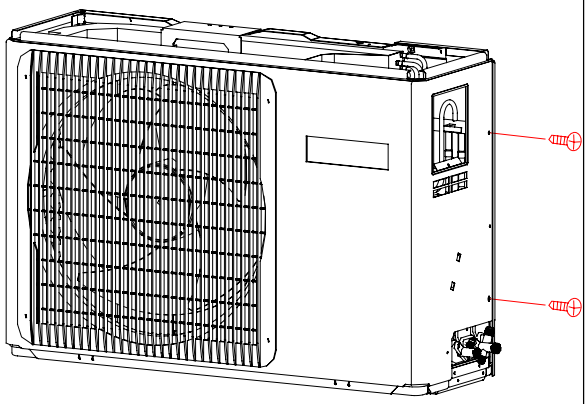 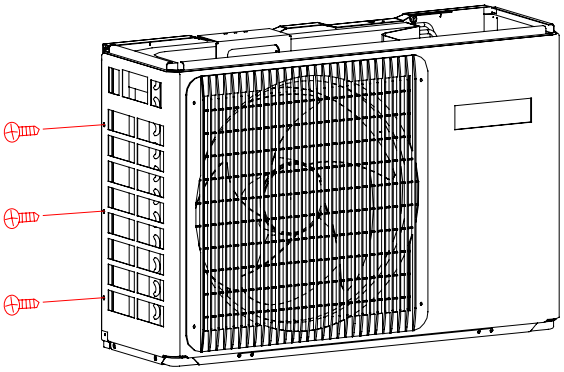	

Все каталоги и инструкции здесь: https://splitsystema48.ru/instrukcii-po-ekspluatacii-kondicionerov.html

Step	Procedure		Points
4	Pull and remove the front panel.	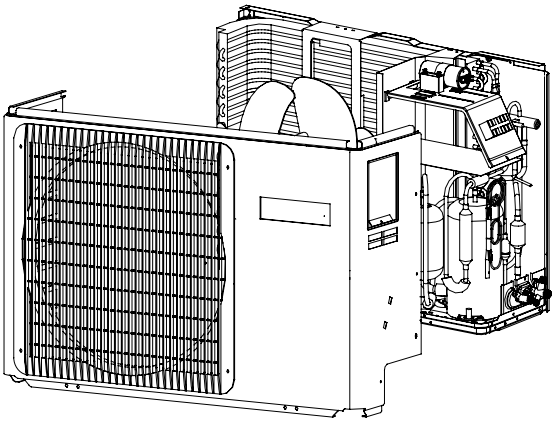	
3.	Remove the outlet grille		
1	Unscrew the four marked screws	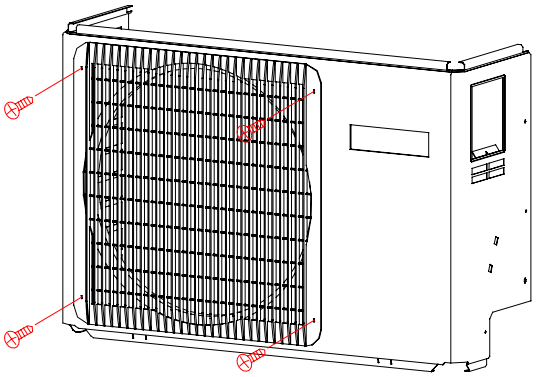	
2	Push the eight hooks on the inside back of front panel,then pull the outlet grille off.	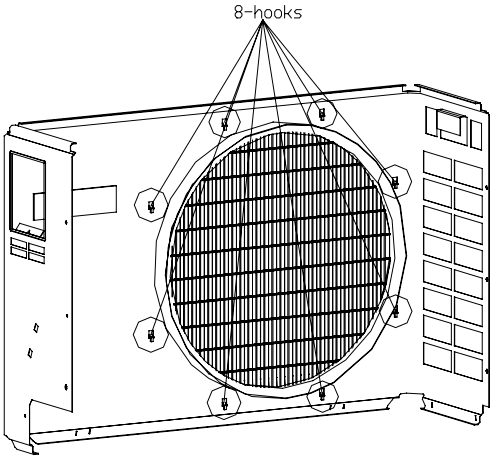	

Все каталоги и инструкции здесь: https://splitsystema48.ru/instrukcii-po-ekspluatacii-kondicionerov.html

9.10 Removal of Electrical Box

Procedure

Warning Be sure to wait 10 minutes or more after turning off all power supplies before disassembling work.

Step	Procedure		Points
1	Remove the fixing screws Then lift the electrical box	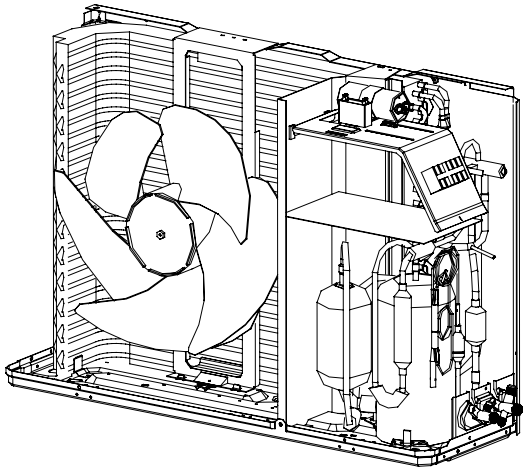 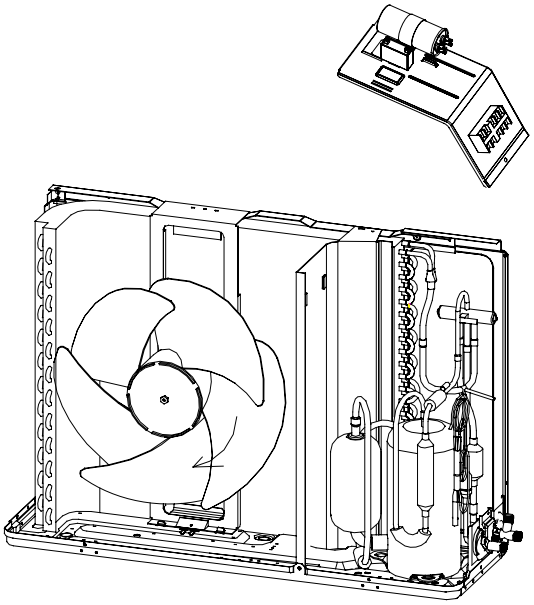	

Все каталоги и инструкции здесь: https://splitsystema48.ru/instrukcii-po-ekspluatacii-kondicionerov.html

9.11 Removal of Fan and Fan Motor

Procedure

Warning Be sure to wait 10 minutes or more after turning off all power supplies before disassembling work.

Step	Procedure		Points
1	Loosen the fixing screw and remove the fan	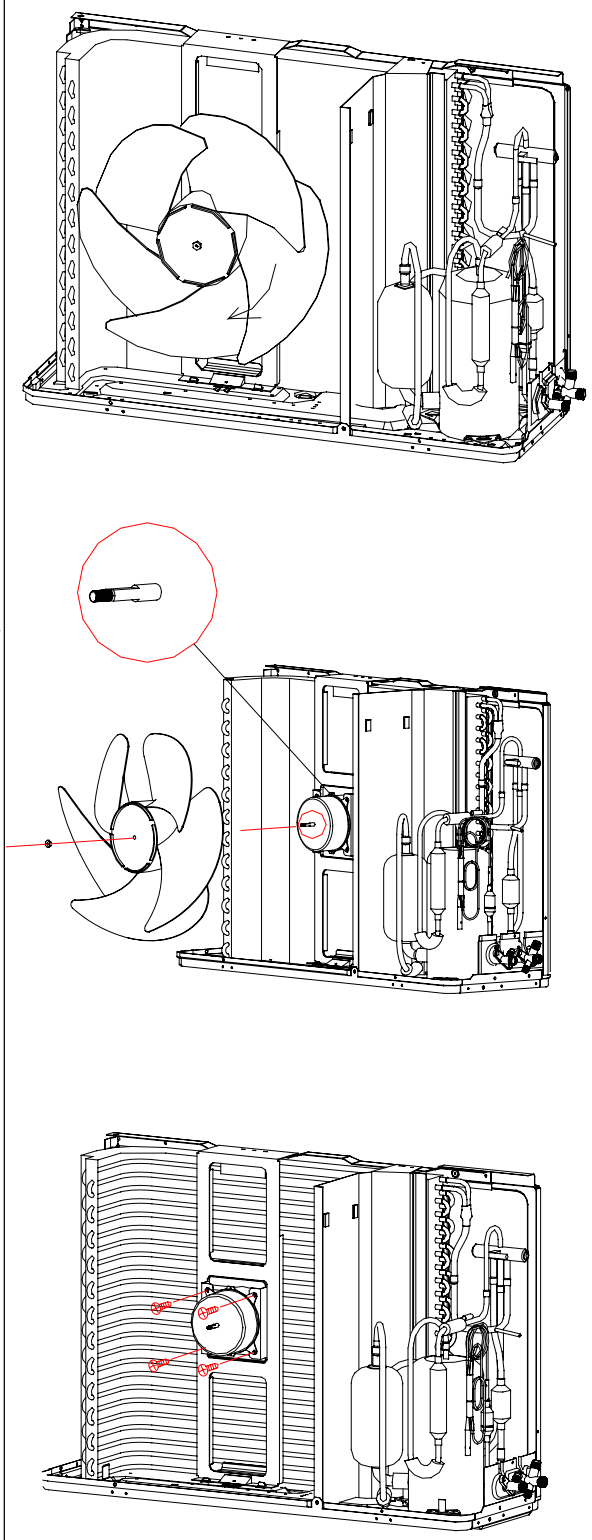	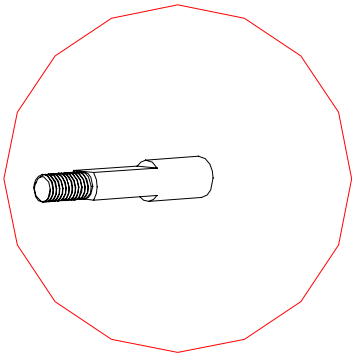 ■ Put the lead wire through the back of the motor when assembling. (so as not to be entangled with the propeller fan)

Все каталоги и инструкции здесь: https://splitsystema48.ru/instrukcii-po-ekspluatacii-kondicionerov.html

9.12 Removal of fan motor bracket and partition

Procedure

Warning Be sure to wait 10 minutes or mo
before disassembling work.

Step	Procedure		Points
1	Loosen the fixing screws and lift the fan motor bracket	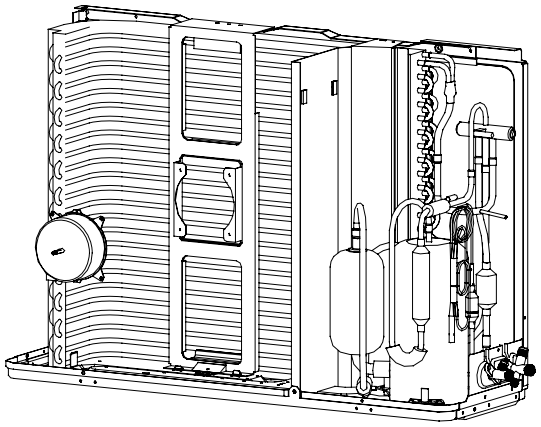 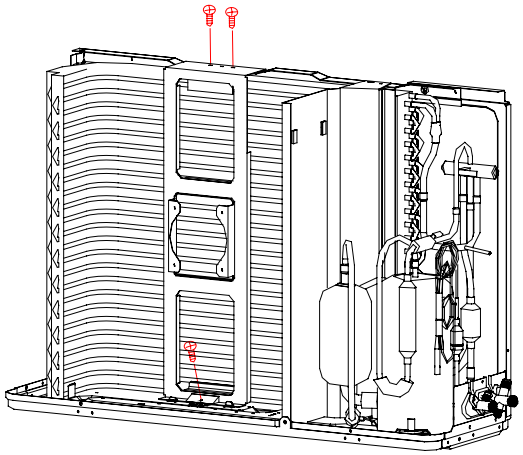 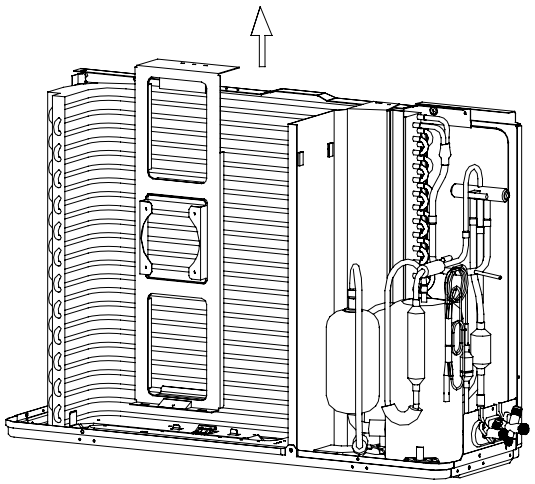	

Все каталоги и инструкции здесь: https://splitsystema48.ru/instrukcii-po-ekspluatacii-kondicionerov.html

Step	Procedure		Points
3	Loosen the 2 screws	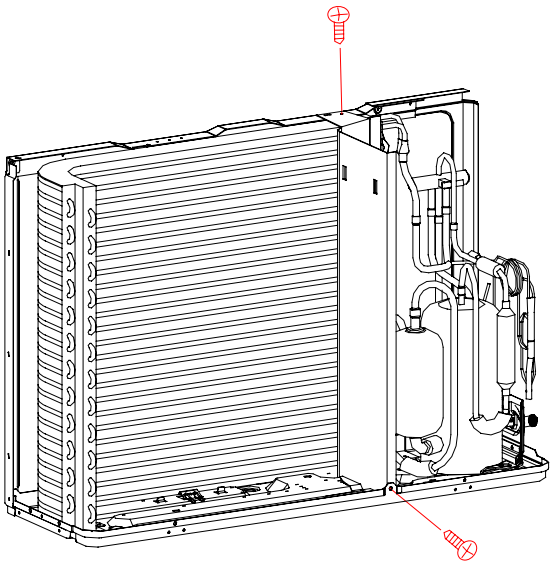	
4	The partition plate has a hook on the lower side.Lift and pull the partition plate to remove.	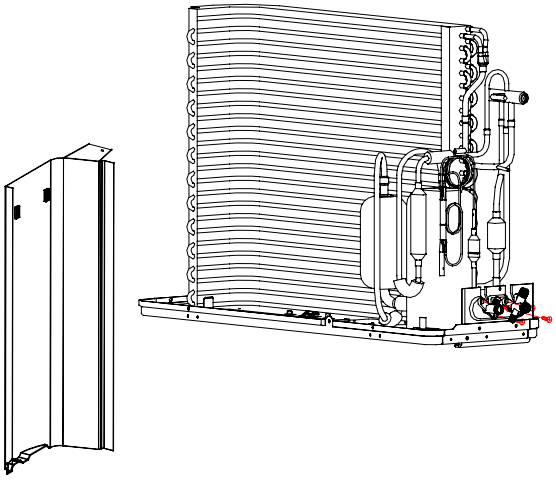	■ When assembling ,fit the lower hook into the bottom frame .
5	Loosen the marked fixing screws	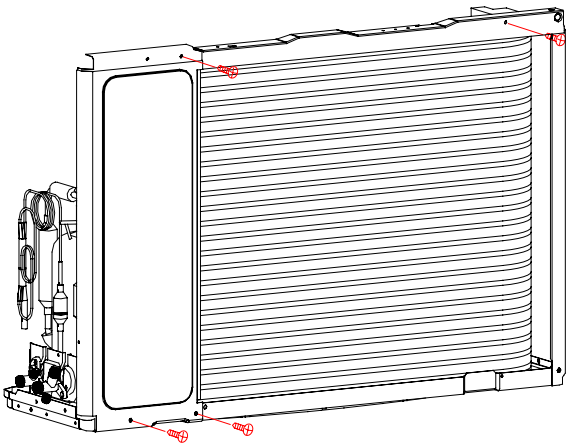	

Все каталоги и инструкции здесь: https://splitsystema48.ru/instrukcii-po-ekspluatacii-kondicionerov.html

9.13 Removal of compressor and heat exchanger

Procedure

Warning Be sure to wait 10 minutes or more after tu
before disassembling work.

Step	Procedure		Points
1	Loosen the marked screw .	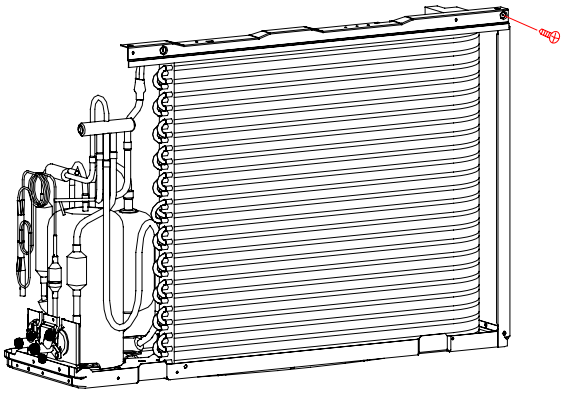	
2	Cut down the conecting pipe and pull out the compressor and remove the valve bracket .	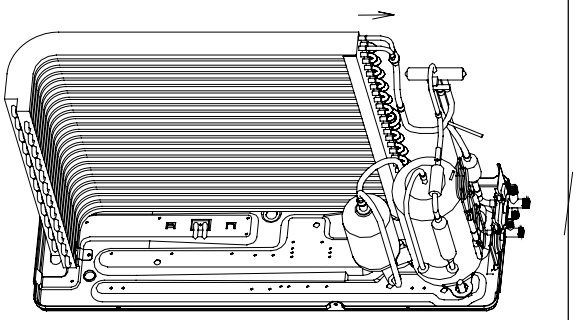 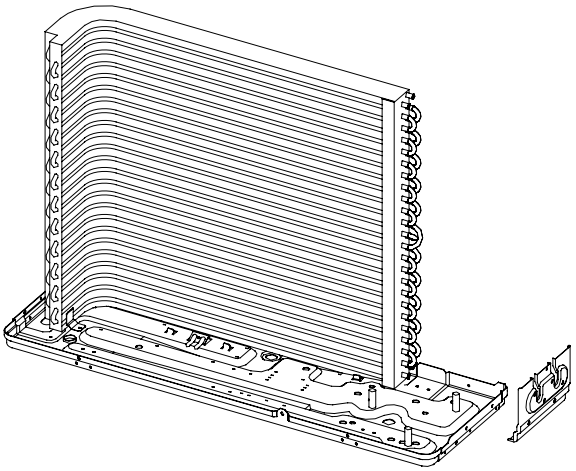	

Все каталоги и инструкции здесь: https://splitsystema48.ru/instrukcii-po-ekspluatacii-kondicionerov.html

Step	Procedure		Points
3	Loosen the marked fixing screw .	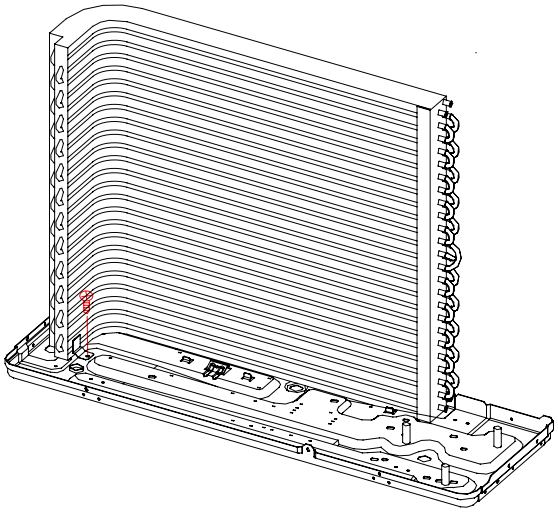	
4	Loosen the fixing hook and remove the heat exchanger .	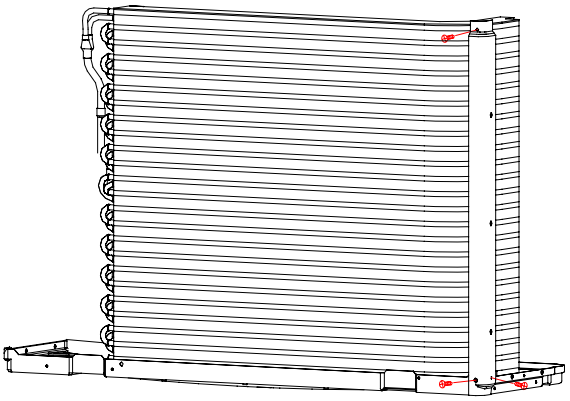 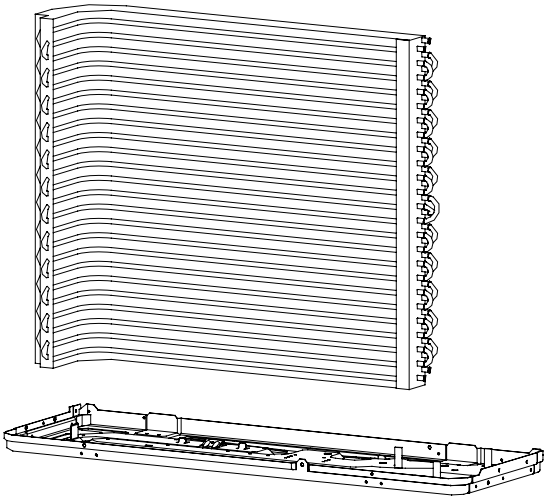	

Все каталоги и инструкции здесь: https://splitsystema48.ru/instrukcii-po-ekspluatacii-kondicionerov.html

10. Appendix

10.1 Piping Diagrams

Cooling mode

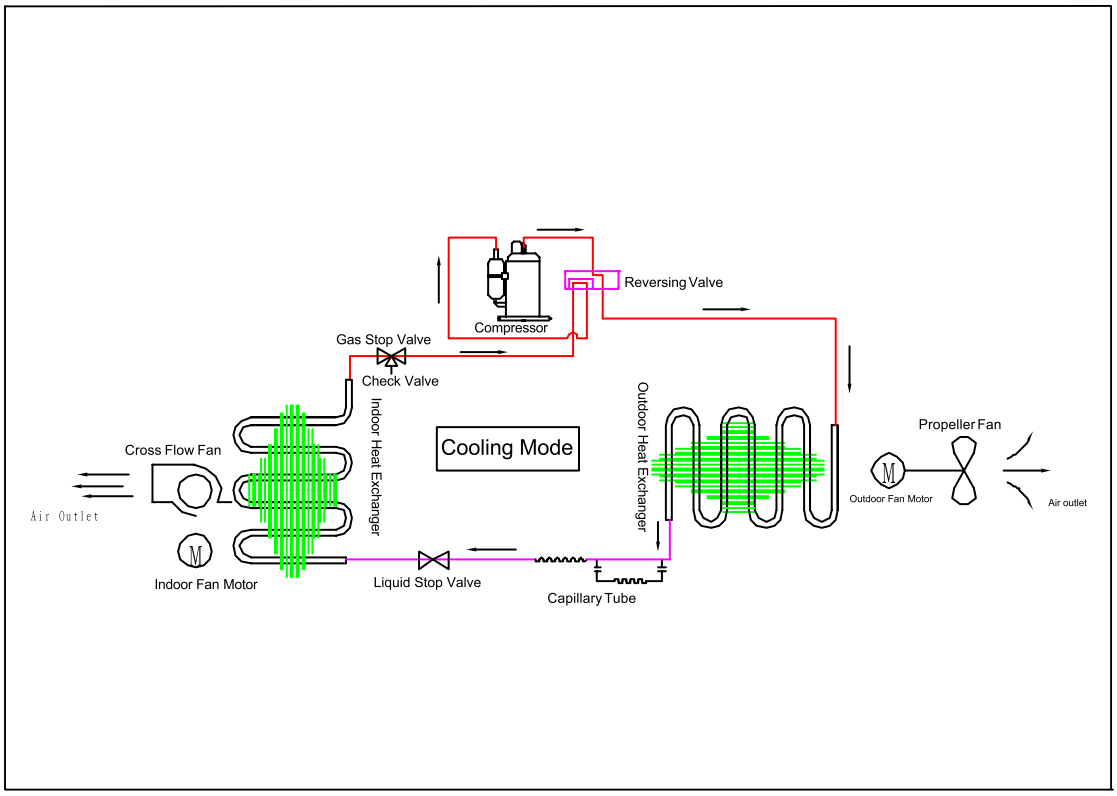

Heating mode

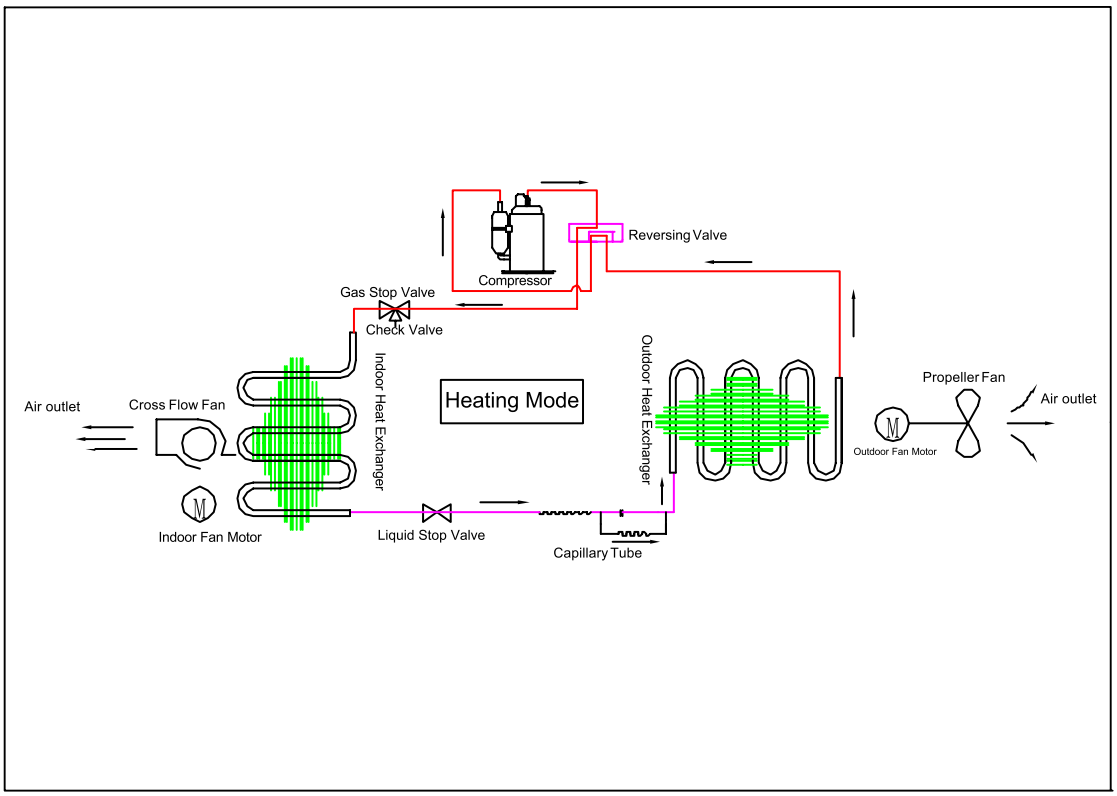

Все каталоги и инструкции здесь: https://splitsystema48.ru/instrukcii-po-ekspluatacii-kondicionerov.html

10.2. Wiring Diagrams

10.2.1 Indoorunit

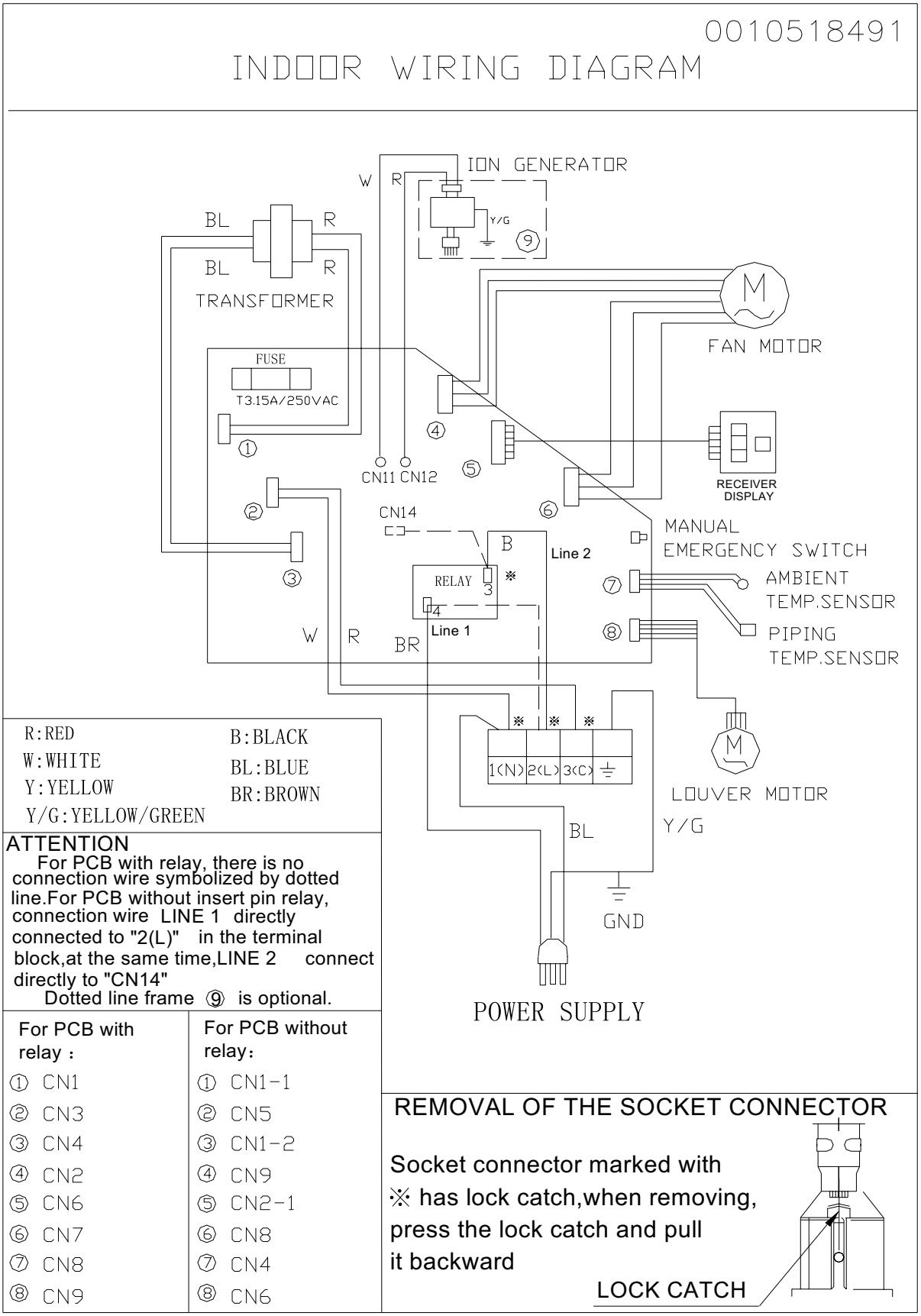

Все каталоги и инструкции здесь: https://splitsystema48.ru/instrukcii-po-ekspluatacii-kondicionerov.html

10.2.2 Outdoor unit

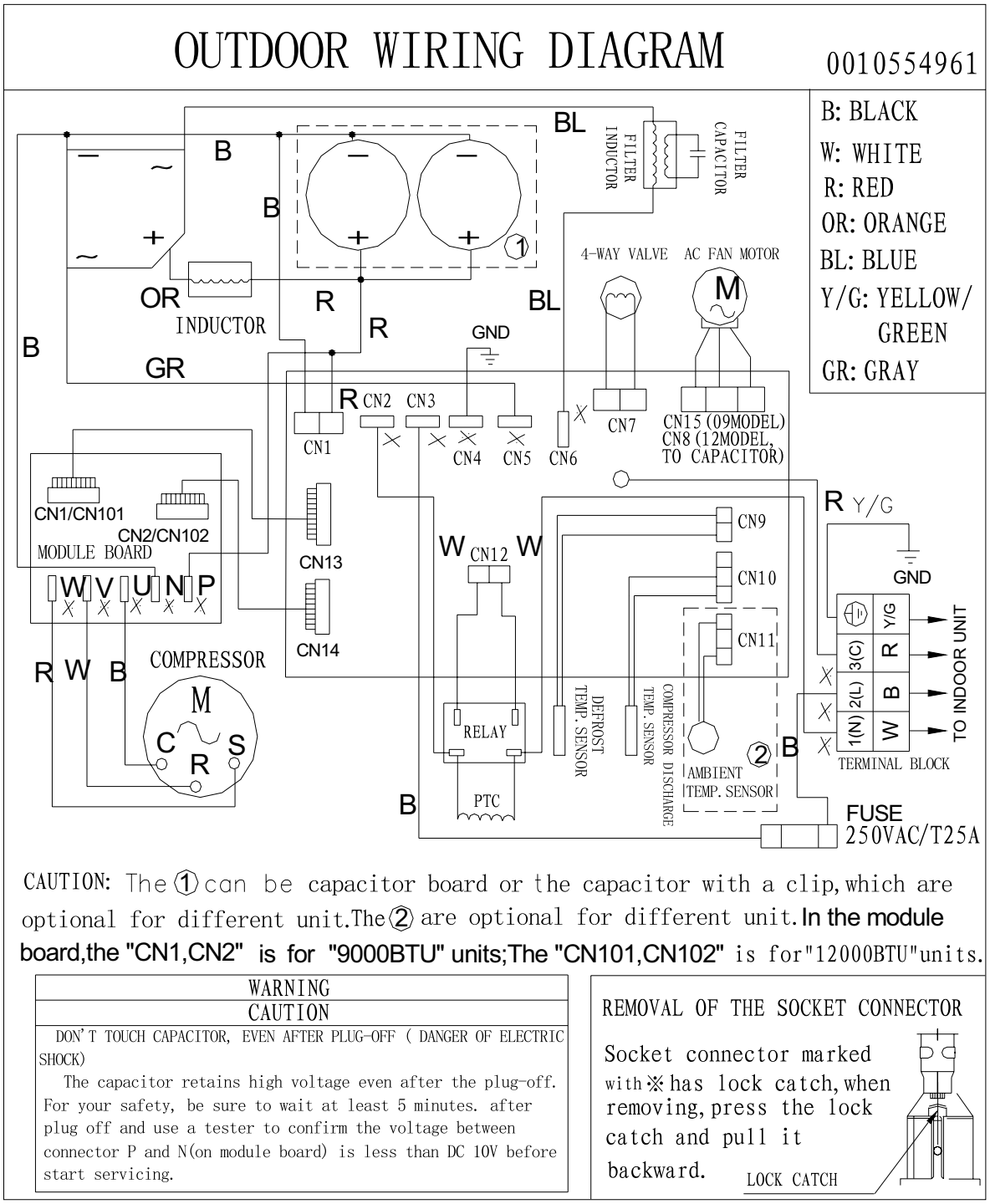

CAUTION: The ① can be capacitor board or the capacitor with a clip, which are optional for different unit. The ② are optional for different unit. In the module board, the "CN1,CN2" is for "9000BTU" units; The "CN101,CN102" is for "12000BTU" units.

WARNING
CAUTION
DON'T TOUCH CAPACITOR, EVEN AFTER PLUG-OFF (DANGER OF ELECTRIC SHOCK) The capacitor retains high voltage even after the plug-off. For your safety, be sure to wait at least 5 minutes. after plug off and use a tester to confirm the voltage between connector P and N(on module board) is less than DC 10V before start servicing.

REMOVAL OF THE SOCKET CONNECTOR

Socket connector marked with ※ has lock catch, when removing, press the lock catch and pull it backward.

Все каталоги и инструкции здесь: https://splitsystema48.ru/instrukcii-po-ekspluatacii-kondicionerov.html

11.Circuit Diagrams

11.1.INDOORUNIT

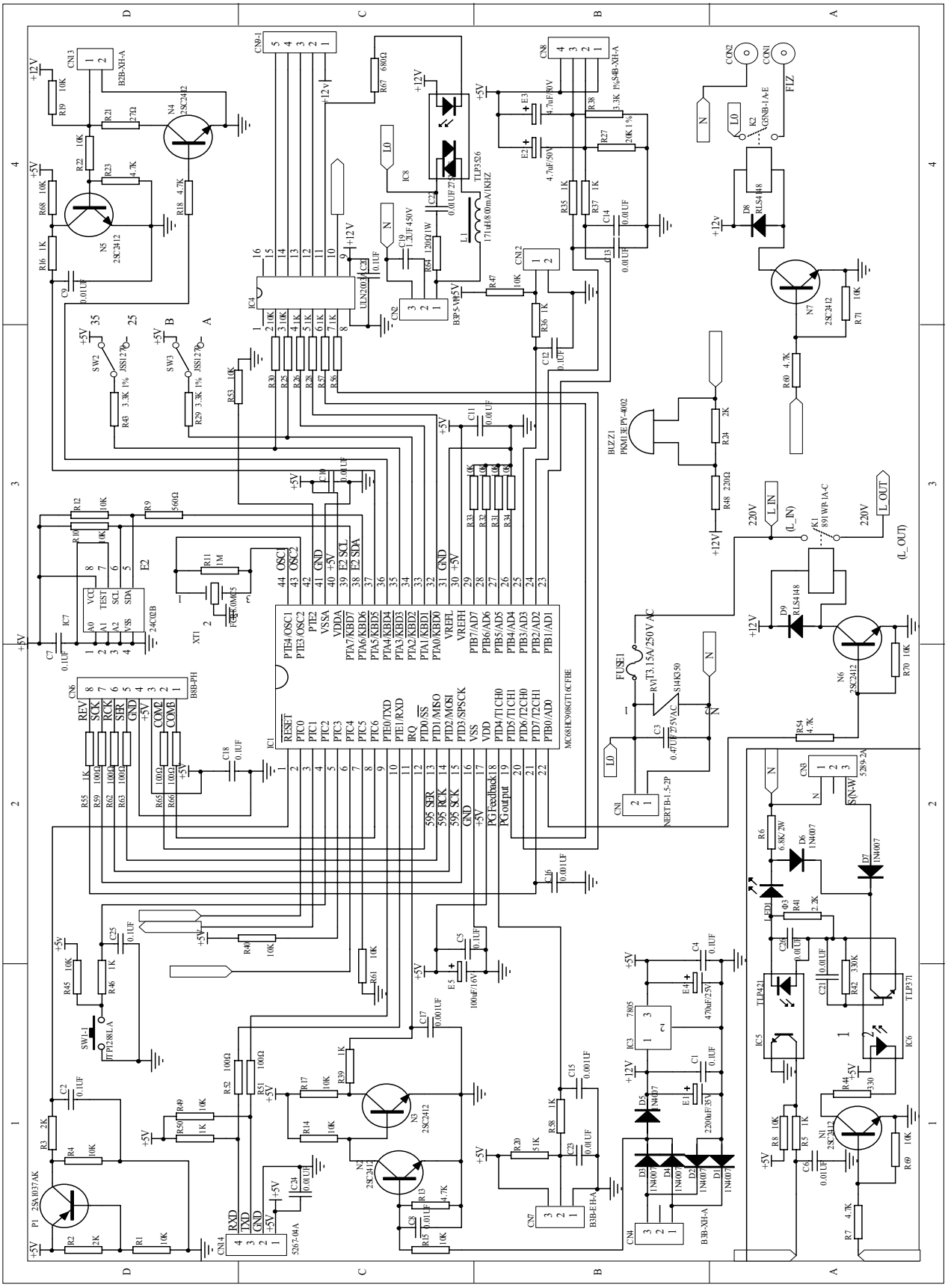

Haier Все каталоги и инструкции здесь: https://splitsystema48.ru/instrukcii-po-ekspluatacii-kondicionerov.html Conditioner

11.2.OUTDOORUNIT

11.2.1 control board Circuit Diagrams

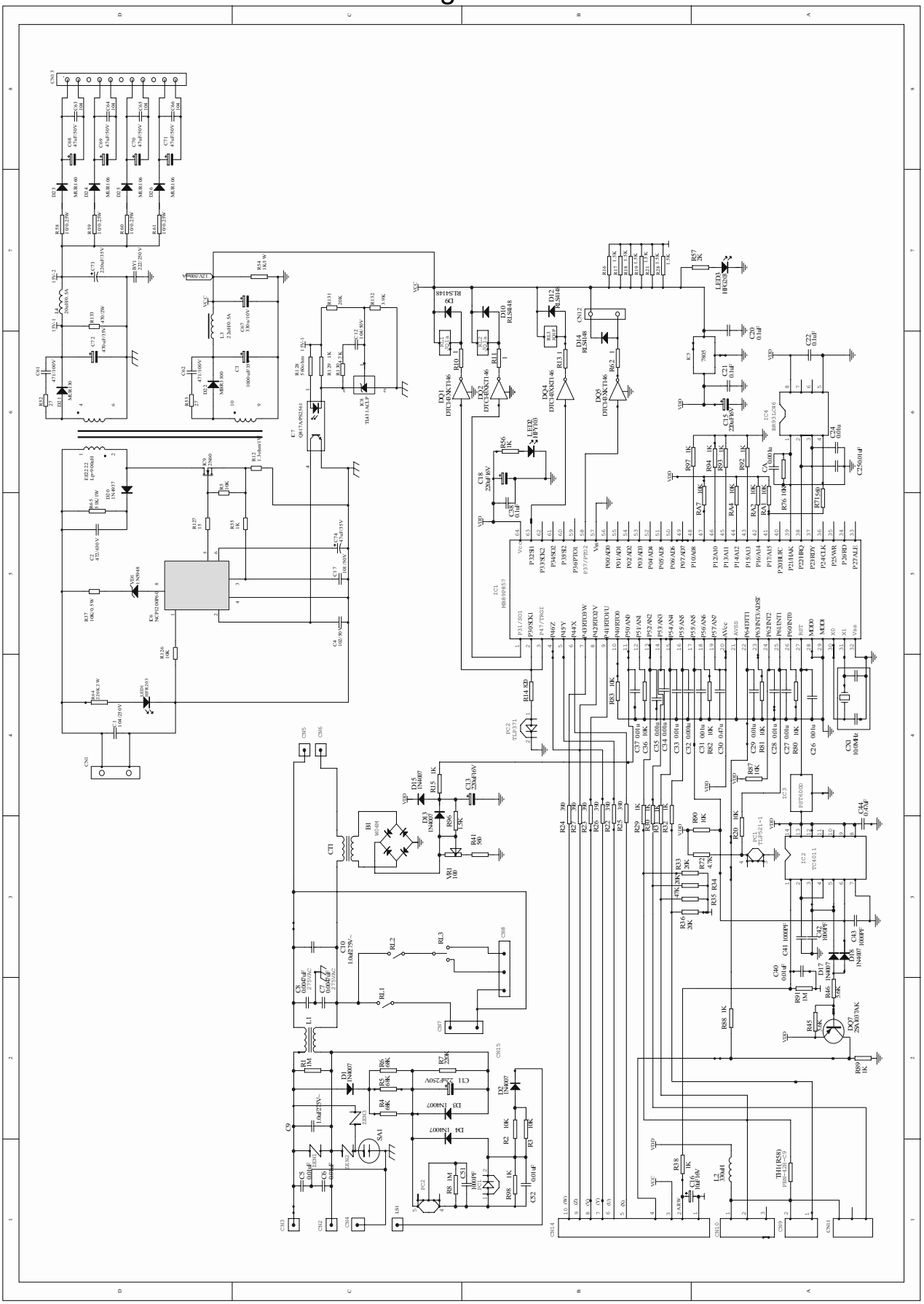

Haier Все каталоги и инструкции здесь: https://splitsystema48.ru/instrukcii-po-ekspluatacii-kondicionerov.html Conditioner

11.2.2 module board Circuit Diagrams

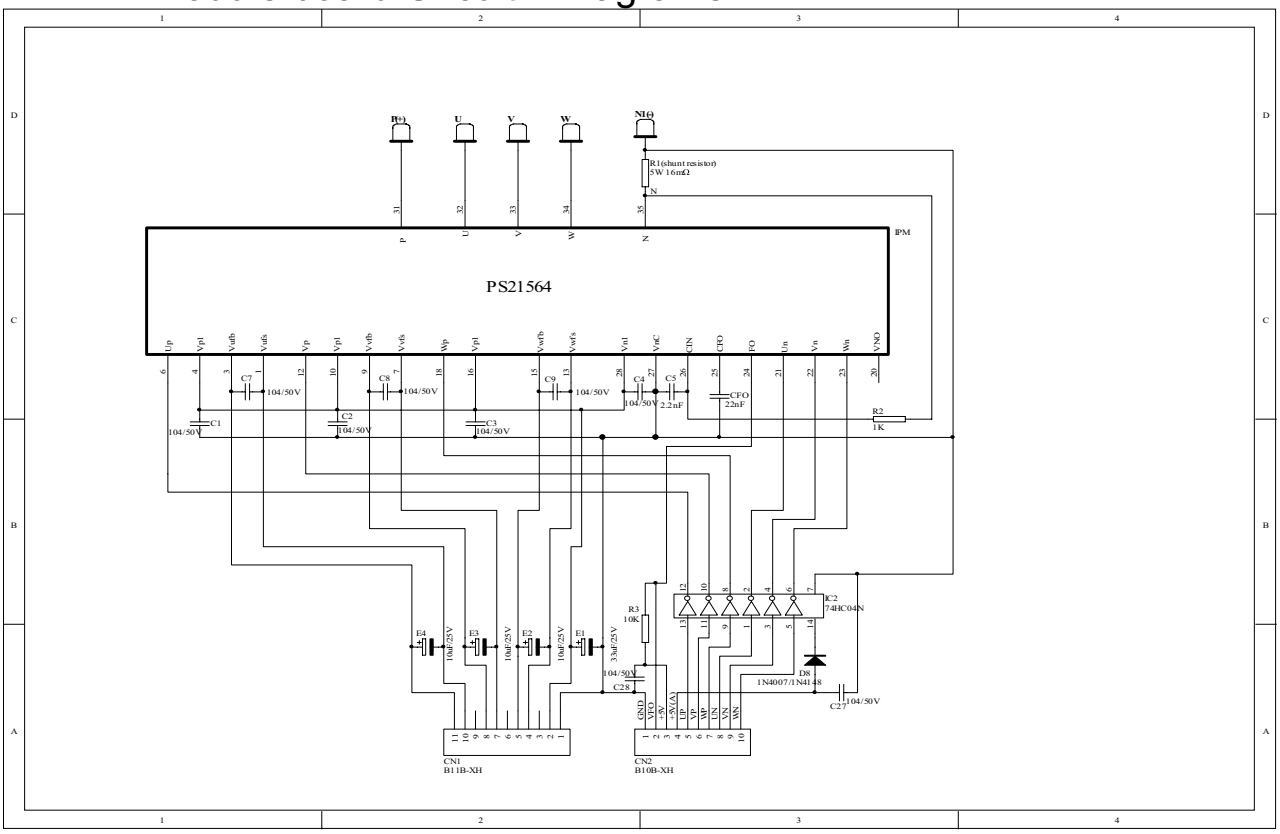

The circuit diagrams of the HSU-09HEA03/(BP) outdoor unit

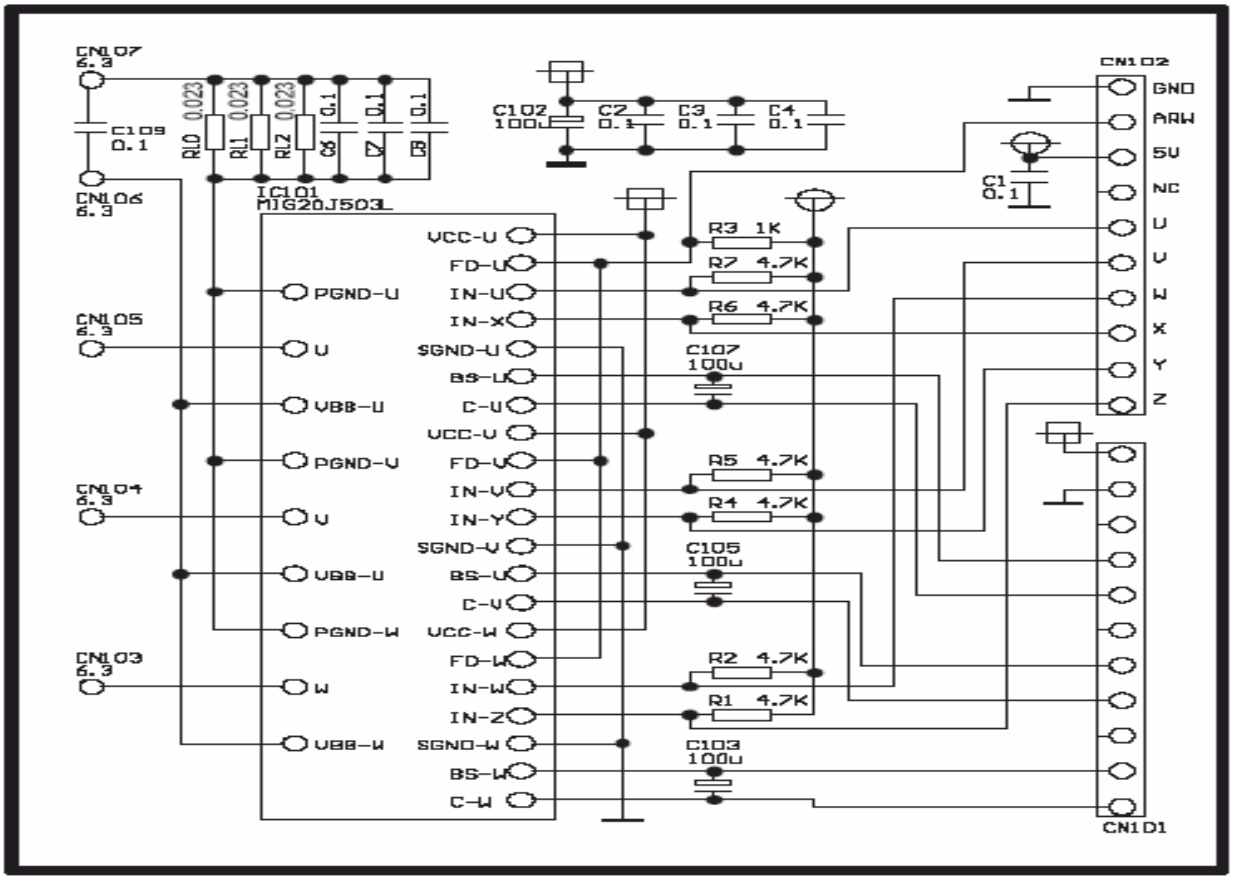

The circuit diagrams of the HSU-12HEA03/(BP) outdoor unit

Haier Все каталоги и инструкции здесь: https://splitsystema48.ru/instrukcii-po-ekspluatacii-kondicionerov.html Conditioner

Sincere Forever

Haier Group

Haier Industrial Park, No.1, Haier Road
266101, Qingdao, China
E-mail: hractech@haier.com
Tel: +86 532 87636957
Http://www.haier.com

Edited by: Yan WenMing
Zhang Haichun
Signed by: Yang Bifei
Approved by: Wu Hongjin

splitoff.ru

Большая библиотека технической документации
https://splitsystema48.ru/instrukcii-po-ekspluatacii-kondicionerov.html
каталоги, инструкции, сервисные мануалы, схемы.